LASK
Ihr Elektro & Baupartner

LOW VOLTAGE SWITCHGEAR



LASK
Ihr Elektro & Baupartner

Powering The Future With Smart Solutions



CONTENTS

Miniature Circuit Breaker

Neutral Switch

Residual Current Circuit Breaker

Residual Current Circuit Breaker With Overcurrent Protection

MCB Isolator

Surge Protector Device

Molded Case Circuit Breaker

AC Contactor

Modular Contactors

Air Circuit Breaker

Toroidal Current Transformer

Earth Leakage Relay

Thermal Relay

Automatic transfer switch

Manual Changeover Switch

Motor Protection Switches

Analog Timer



General

■ Function

MBC-4.5, MBC-6, MBD-10, MBC-H, MBC-6DC and MBC-10DC types provide protection of circuits against short-circuit currents, protection against overload currents, switching and isolation. These circuit-breakers are used in domestic installations as well as in commercial and industrial electrical distribution systems.

■ Selection

When selecting the circuit-breaker, the technical data of the electrical installation at the installation point must be considered. The prospective short-circuit current at this point must always be lower than the breaking capacity of the device, and the rated voltage of the installation must comply with the device specifications.

Technical Data

Type			MBC-4.5	MBC-6	MBD-10	MBC-H	MBC-6DC	MBC-10DC
No.of poles			1 2 3 4	1 2 3 4	1 2 3 4	1 2 3 4	1 2 4	1 2 4
Rated nominal current (at 30°C)	In	A	2, 4, 6, 10, 16,20, 25,32, 40, 50, 63	2, 4, 6, 10, 16,20, 25,32, 40, 50, 63	2, 4, 6, 10, 16,20, 25,32, 40, 50, 63	80, 100, 125	6, 10, 16,20, 25,32, 40, 50, 63	6, 10, 16,20, 25,32, 40, 50, 63
Instantaneous tripping class			B:(3-5)xIn C:(5-10)xIn D:(10-20)xIn	B:(3-5)xIn C:(5-10)xIn D:(10-20)xIn	B:(3-5)xIn C:(5-10)xIn D:(10-20)xIn	B:(3-5)xIn C:(5-10)xIn D:(10-20)xIn	C:(7-14)xIn	C:(7-14)xIn
Rated operating voltage	Ue	AC (V)	230/400 400	230/400 400	230/400 400	230/400 400	250 500 1000	48 110 250
Power supply			AC	AC	AC	AC	DC	DC
Rated insulation voltage	Ui	V	690	690	690	690	440	440
Rated impulse withstanding voltage	Uimp	kV	6	6	6	6	6	6
Rated short circuit breaking capacity	Ics	KA	4,5	6	10	10	6	10
Energy limiting class			3	3	3	3	3	3
Electrical life (operation)	op.	230 V	4000	5000	6000	5000	3000	3000
Mechanical life (operation)	op.		20000	20000	20000	20000	20000	20000
Protection class			IP 20	IP 20	IP 20	IP 20	IP 20	IP 20
Operating temperature		°C	-30 to +60	-30 to +60	-30 to +60	-30 to +60	-30 to +60	-30 to +60
Storage temperature		°C	-40 to +70	-40 to +70	-40 to +70	-40 to +70	-40 to +70	-40 to +70
Colour			RAL 7035	RAL 7035	RAL 7035	RAL 7035	RAL 7035	RAL 7035
Assembly (EN 60715)			35 mm. DINRail	35 mm. DINRail	35 mm. DINRail	35 mm. DINRail	35 mm. DINRail	35 mm. DINRail
Min. Max.Connection section		mm²	1-25	1-25	1-25	25-50	1-25	1-25
Max. Clamping torque		Nm	2,5	2,5	2,5	3,5	2,5	2,5

Structure

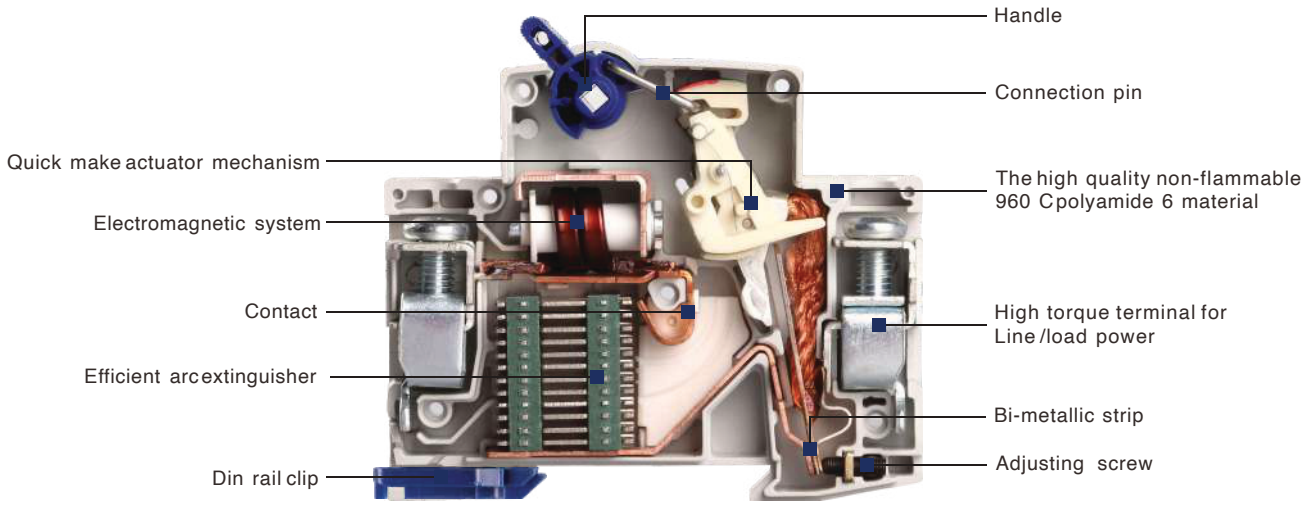

Trip Characteristic Curve

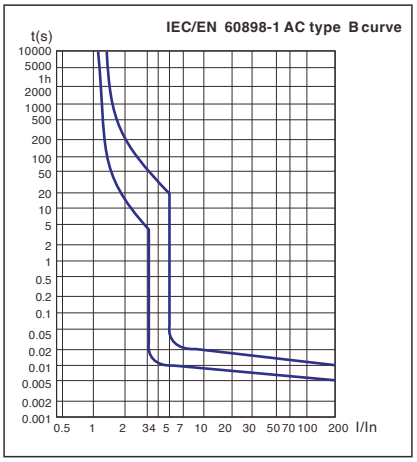

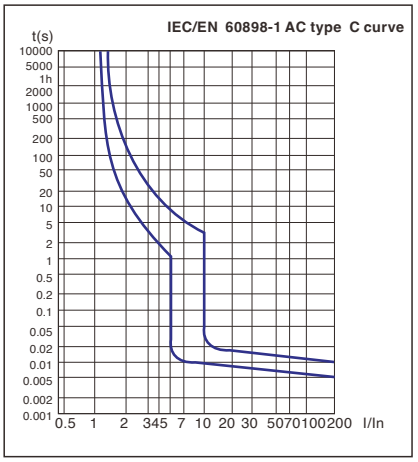

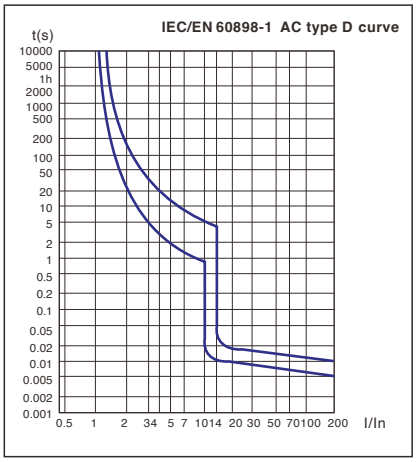

Tripping Curves

B Curve (3-5In)
Designed for protection of resistive loads. Suitable for applications such as residential wiring, lighting circuits, and long cable runs with low inrush current.

C Curve (5-10In)
Designed for protection of circuits with moderate inrush currents. Suitable for general applications such as socket outlets, small motors, fluorescent lighting, and mixed residential or commercial loads.

D Curve(10-14In)
Designed for protection of circuits with high inrush currents. Suitable for applications such as large motors, transformers, welding machines, x-ray equipment, discharge lamps (sodium/mercury vapor), and similar heavy inductive loads.

Rated short-circuit breaking capacity(Icn)

Model number	Rated current(A)	Number of poles	Rated voltage(V)	Rated short circuit current(A)	Operating short-circuit current(A)
MBC	1~63	1	230/400	6000	6000
		2、3、4	400		
MBD	1~63	1	230/400	10000	7500
		2、3、4	400		

Mechanical Electrical life

Category	Number (times)	Operating frequency (times/hour)	Rated current (A)
Electrical life	10000	240	1~32
		120	40~63
Mechanical life	20000	240	1~63

Magnetic Tripping Condition

Magnetic Tripping Characteristic	Test Current	TrippingTime	Result
B	3 In	t≥0.1 sec	Not tripped
B	5 In	t<0.1 sec	Tripped
C	5 In	t≥0.1 sec	Not tripped
C	10 In	t<0.1 set	Tripped
D	10 In	≥0.1 sec	Not tripped
D	20 In	t<0.1 sec	Tripped

Thermal Tripping Condition

Rated Current(In)	Test Current	TrippingTime	Result
In ≤ 63 A	1.13 In	t>1 hour	Not tripped
In >63 A	1.13 In	t≥ 2 hour	Not tripped
In ≤ 63 A	1.45 In	t< 1 hour	Tripped
In>63 A	1.45 In	t<2 hour	Tripped
In ≤ 32 A	2.55 In	1 sec<t< 60 sec	Tripped
In>32 A	2.55 In	1 sec<t<120 sec	Tripped

Wiring: It is suitable for copper wire connection below 25mm^2, The wiring method is to tighten the wiring with screwsand the torque is 2.0N·8m

Rated current In(A)	Nominal cross-sectional area of copper conductor(mm^2)
1~6	1
10	1.5
16、 20	2.5
25	4
32	6
40、 50	10
63	16

Power consumption per pole of the circuit breaker

Rated current range In(A)	Maximum power consumption per pole (W)
In ≤10	2.5
10<In ≤16	3
16<In ≤25	4
25<In ≤32	5
32<In ≤40	6
40<In ≤50	8
50<In ≤63	10

Current Correction Factor Used At Different Altitudes

Trip type	Rated current (A)	Current correction factor			Give an example
		≤ 2000m	(2000~3000)m	≥ 3000m	
B、 C、 D	1、 2、 3、 4、 6、 10、 16、 20、 25、 32、 40、 50、 63	1	0.9	0.8	Rated current 10A Therated current of the product after 2500m capacityreduction is: 0.9×10=9A

Temperature Derating

MCBs are designed and calibrated to carry their rated current and to operate within their specified thermal time/current zone at 30 °C. Testing is carried out with the breaker mounted individually in a vertical position under controlled conditions.

If the circuit breaker is required to operate in environments that differ from these reference conditions, correction factors must be applied to the standard data. For example, when operating at ambient temperatures higher than 30 °C, the breaker will trip at progressively lower currents within the designated time/current zone.

The reference temperature is 30°C

Ambient temperature → / Rated current(A) ↓	-35°C	-30°C	-20°C	-10°C	0°C	10°C	20°C	30°C	40°C	50°C	60°C	70°C
1	1.30	1.26	1.23	1.19	1.15	1.11	1.05	1.00	0.96	0.93	0.88	0.83
2	2.60	2.52	2.46	2.38	2.28	2.20	2.08	2.00	1.92	1.86	1.76	1.66
3	3.90	3.78	3.69	3.57	3.42	3.30	3.12	3.00	2.88	2.79	2.64	2.49
4	5.20	5.04	4.92	4.76	4.56	4.40	4.16	4.00	3.84	3.76	3.52	3.32
6	7.80	7.56	7.38	7.14	6.84	6.60	6.24	6.00	5.76	5.64	5.28	4.98
10	13.20	12.70	12.50	12.00	11.50	11.10	10.60	10.00	9.60	9.30	8.90	8.40
16	21.12	20.48	20.00	19.20	18.40	17.76	16.96	16.00	15.36	14.88	14.24	13.44
20	26.40	25.60	25.00	24.00	23.00	22.20	21.20	20.00	19.20	18.60	17.80	16.8
25	33.00	32.00	31.25	30.00	28.75	27.75	26.50	25.00	24.00	23.25	22.25	21.00
32	42.56	41.28	40.00	38.72	37.12	35.52	33.92	32.00	30.72	29.76	28.16	26.88
40	53.20	51.20	50.00	48.00	46.40	44.80	42.40	40.00	38.40	37.20	35.60	33.6
50	67.00	65.50	63.00	60.50	58.00	56.00	53.00	50.00	48.00	46.50	44.00	41.50
63	83.79	81.90	80.01	76.86	73.71	70.56	66.78	63.00	60.48	58.90	55.44	52.29

Operation in DC Current

Because of their quick make-and-break design and excellent arc-quenching capability, miniature circuit breakers are suitable for DC applications. For MCBs designed for AC use but applied in DC installations, the following considerations must be observed:

- For overload protection, both poles of the MCB must be connected. Under these conditions, the tripping characteristic of the MCB in DC is similar to that in AC.
- For short-circuit protection, both poles of the MCB must be connected. Under these conditions, the tripping characteristic of the MCB in DC is approximately 40% higher than in AC.

Structural Characteristics

- High short-circuit breaking capacity.
- Dual wiring function: the outlet end can be easily connected to standard busbars, as well as soft and hard wires.
- Red and green safety indication for higher safety.
- With energy-storage mechanism operation, the contact closes quickly, reducing adverse influence from manual handle operation and significantly improving service life.
- Terminals equipped with dovetails to prevent misconnection, improving wiring efficiency and reliability.
- Compatible with a variety of modular accessories.
- Housing and other plastic parts are made of high flame-retardant, high-temperature and impact-resistant materials.

Overall And Mounting Dimensions (mm)

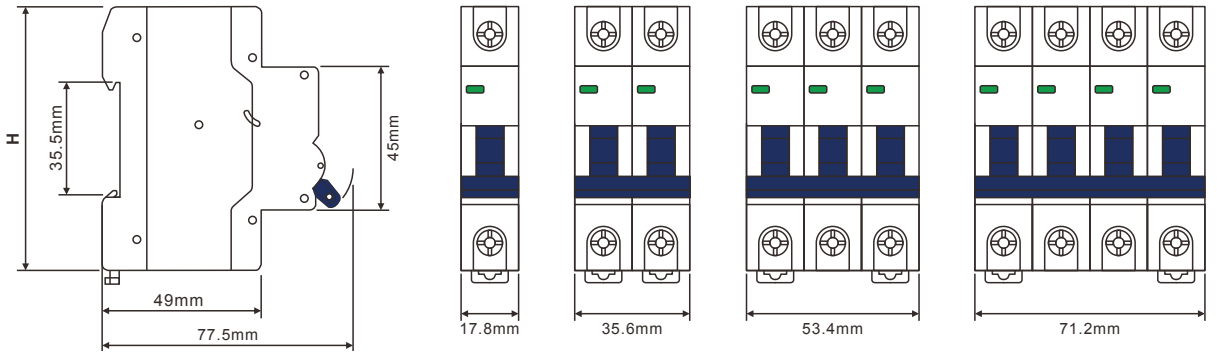

***MBD-10: Height(H)=85.5mm**

MBC-4.5/MBC-6/MBC-10/MBD-10DC: Height(H)=81.5mm

LASK
Ihr Elektro & Baupartner

MCB Miniature Circuit Breaker

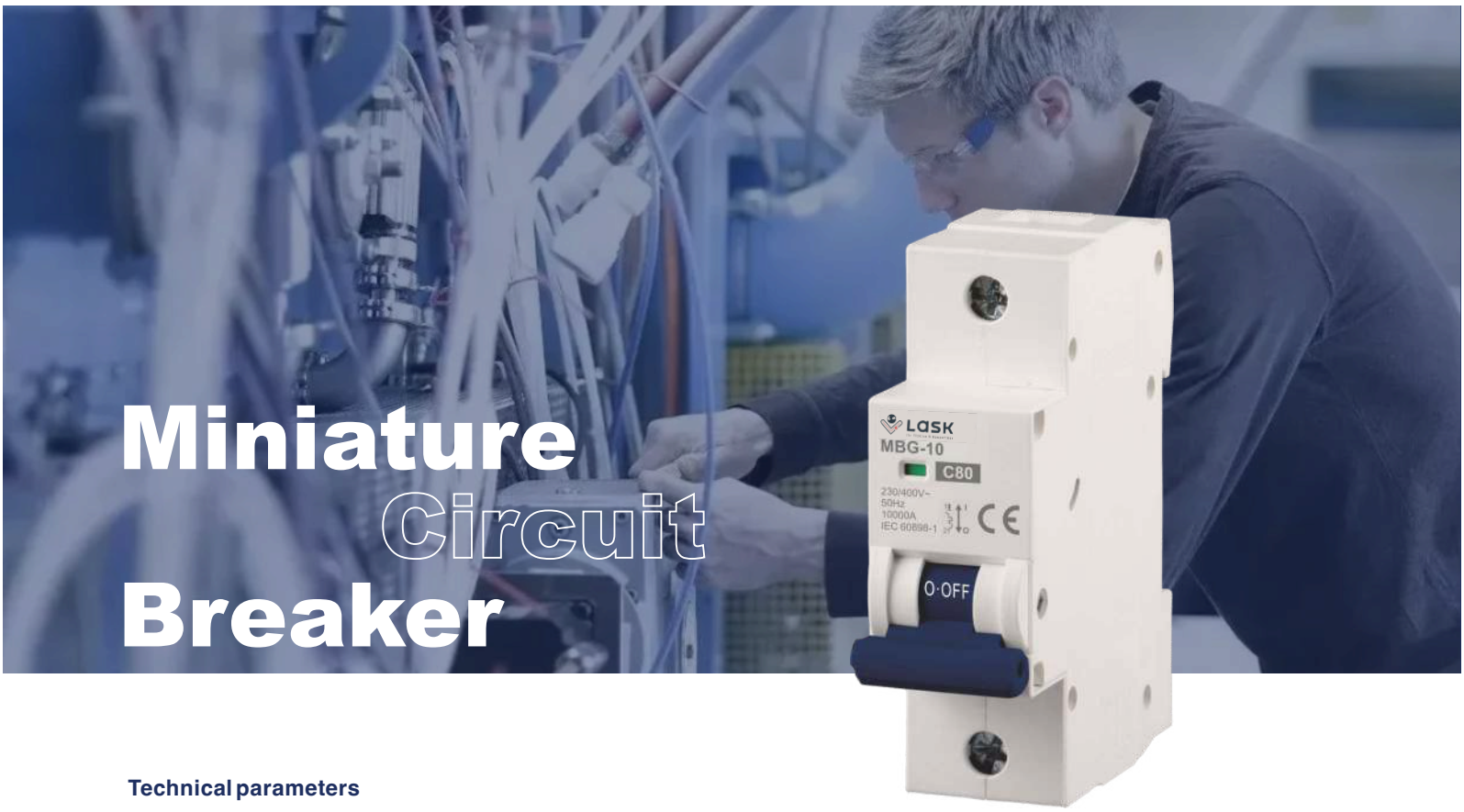

Miniature Circuit Breaker

Technical parameters

Rated current(In):63A、 80A、 100A、 125A.
Rated operation voltage Ue:230V/400V~(1P), 400V~(2P、 3P、 4P);
Rated insulation voltage Ui: 500V;
Frequency: 50/60Hz;
Thermal magnetic release:C、D;
Number of poles:1P、 2P、 3P、 4P
Mechanical life: 20000 cycles;
Electrical life: 6000 cycles;
Rated short-circuit breaking capacity(Icn):6kA、10kA;
Short-circuit breaking capacity (Ics):6kA、 10kA;
Rated impulse withstand voltage (Uimp): 4kV.

Compliant standards

IEC60898-1 , IEC60947-2

Overall and mounting dimensions (mm)

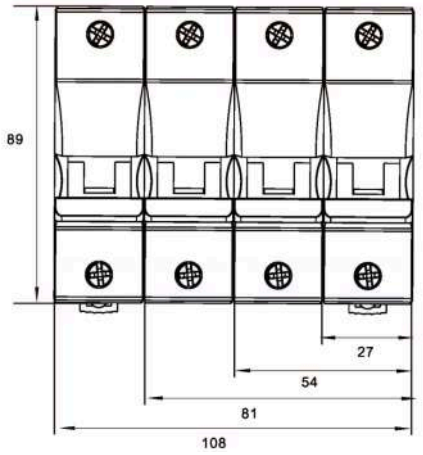

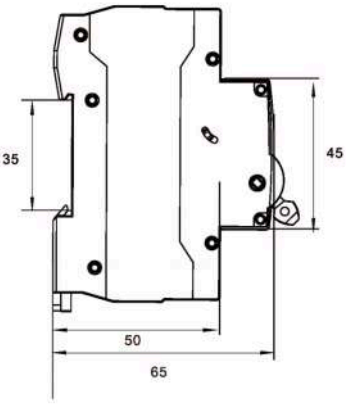



Neutral Switch

1. Product Overview

This product is an innovative 1P+N Miniature Circuit Breaker (MCB) that differs from conventional integrated DPN (1P+N) circuit breakers. The Line (L) pole provides overload and short-circuit protection, while the Neutral (N) pole is an independent isolation pole equipped with a one-way mechanical interlock mechanism.

Closing sequence:

- The N pole must be switched ON first, followed by the MCB (L pole).
- There is no mandatory sequence for switching OFF.

The Neutral pole is intended for electrical isolation only and is not capable of interrupting load current or fault current. With a rated current of up to 63A, this product exceeds the conventional 40A limit of standard DPN circuit breakers, making it suitable for compact distribution boards requiring higher current ratings.

2. Operating Principle (Mechanical Interlock)

Closing Operation (Mandatory Sequence)

The Neutral (N) pole must be switched ON first. Only after the N pole has been closed can the Line (MCB) pole be switched ON.

If the N pole remains in the OFF position, the mechanical interlock blocks the MCB operating handle, preventing the Line pole from being closed. This eliminates the risk of energizing the Line conductor before the Neutral conductor.

Opening Operation (No Mandatory Sequence)

There is no forced opening sequence. The following operations are possible:

1. Switch OFF the MCB first, then switch OFF the N pole (recommended procedure).
2. Since the two handles are physically independent, either pole may be operated individually.

Important Notice

It is strictly prohibited to switch OFF the Neutral pole while the MCB remains in the ON position. If the Neutral pole needs to be opened, the Line (MCB) pole must be switched OFF first.

Automatic Trip Operation

When the MCB automatically trips due to overload or short circuit, the Neutral pole remains in its original position. The Neutral circuit therefore remains energized until it is manually opened.

Mechanical Design

There is no permanent mechanical linkage between the Line pole and the Neutral pole. The interlock functions only during the closing operation. The opening operation is not mechanically interlocked.

Residual Current Circuit Breaker

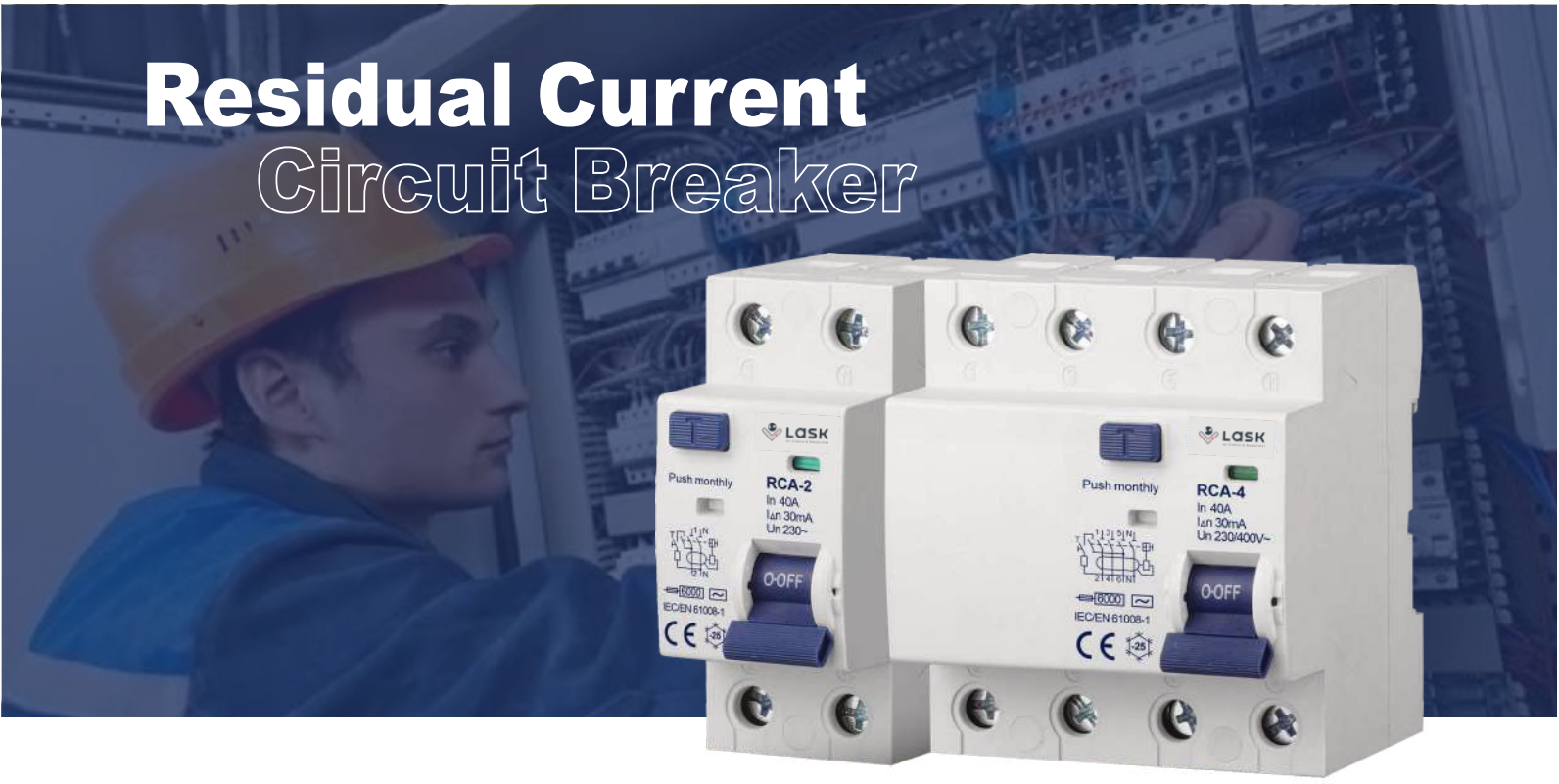

Function

LASK Residual Current Circuit Breakers (RCCBs)– RCA-2/AC, RCA-4/AC, RCA-2/A, RCA-4/A, RCB-2/AC, RCB-4/AC, RCB-2/A+s, RCB-4/A+s, RCK-2, RCK-4 protect people against indirect contact and provide additional protection against direct contact. Furthermore, they protect installations against fire hazards caused by insulation faults. RCCBs are widely used in residential installations as well as in commercial and industrial electrical distribution systems.

Technical Specifications

Type			RCA-2/AC	RCA-4/AC	RCA-2/A	RCA-4/A	RCB-2/AC	RCB-4/AC	RCA-2/A+s	RCA-4/A+s	RCK-2	RCK-4
No.of poles			2	4	2	4	2	4	2	4	2	4
Rated current	In	A	25,32,40,63,80,100		25,32,40,63,80,100		25,32,40,63,80,100		25,32,40,63,80,100		25,40,63	
Rated residual current	IΔ		30, 100, 300		30, 100, 300		30, 100, 300		30, 100, 300		30, 300	
Rated frequency		mA	50-60		50-60		50-60		50-60		50-60	
Type of residual current		Hz	AC		A		AC		A		B	
Tripping unit			Magnetic		Magnetic		Magnetic		Magnetic		Magnetic	
Operating characteristic			General		General		General		Delay Time Selectivity		General	
Rated operating voltage	Ue	AC (V)	230	400	230	400	230	400	230	400	230	400
Rated insulation voltage	Ui	V	500		500		500		500		500	
Rated impulse withstand voltage	Uimp	kV	6		6		6		6		4	
Ratedshort circuitwithstand currentwith fuse (inc/IΔc)		KA	6		6		10		10		10	
Electrical life (operation)	op.	230 V	6000		6000		10000		10000		10000	
Mechanical life (operation)	op.		20000		20000		20000		20000		20000	
Degree of protection (together with box)			IP 20 (IP 40)		IP 20 (IP 40)		IP 20 (IP 40)		IP 20 (IP 40)		IP 20 (IP 40)	
Ambient operating temperature		°C	-25 to +60		-25 to +60		-25 to +60		-25 to +60		-25 to +60	
Max. storagetemperature		°C	-40 to +70		-40 to +70		-40 to +70		-40 to +70		-40 to +70	
Dimensions	Width	mm	35	70	35	70	35	70	35	70	53.5	70
	Length	mm	80		80		80		80		81.5	
Colour			RAL 7035		RAL 7035		RAL 7035		RAL 7035		RAL 7035	
Assembly type (EN 60715)			35mm DIN Rail		35mm DIN Rail		35mm DIN Rail		35mm DIN Rail		35mm DIN Rail	
Min. max.connection section		mm²	2.5...25		2.5...25		2.5...25		2.5...25		2.5...25	

I RCCB Residual Current Circuit Breaker

Overall And Mounting Dimensions (mm)

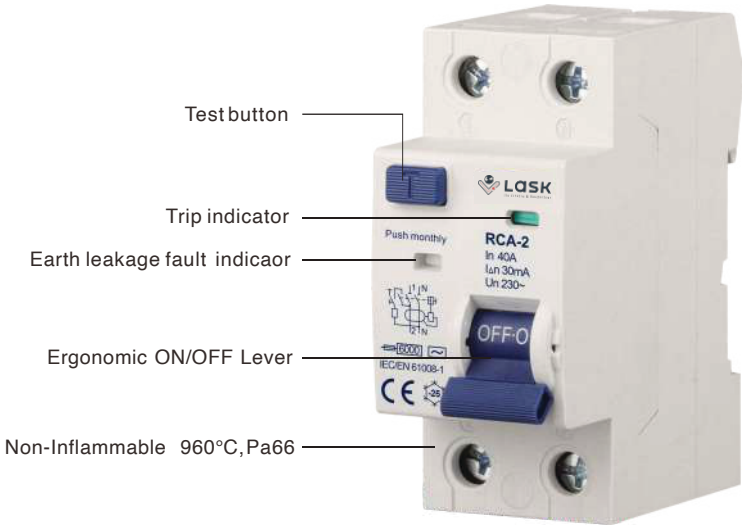

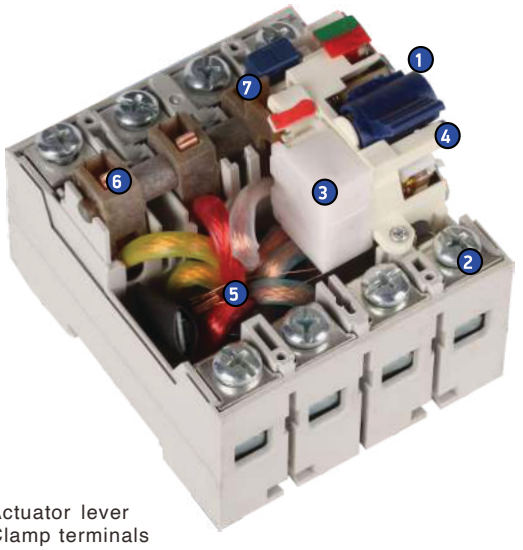

1. Actuator lever
2. Clamp terminals
3. Trip relay insidecover
4. MechanismSummation current transformer
5. Rotary system of movable contacts
6. Reset button with resistancemultiplier

Functional Principle of RCCB

Every Residual Current Circuit Breaker (RCCB)has three basic components;

Toroidal current transformer, Trip relay, Switching mechanism.

The function of these components is to detect and evaluate the residual current and to interrupt the power supply if the residual current exceeds a specified value. For correct operation of an RCCB, all live conductors of the protected circuit—or at least as many conductors as necessaryfor proper appliance function—must pass through the summation current transformer.

An RCCBworks on the principle of comparing currents in live conductors passing through this summation toroidal current transformer. Under normal conditions (no phase-to-ground fault), the vector sum of instantaneous current values equals zero. The magnetic fluxes from the various conductors cancel each other out inside the transformer core.

When an earth fault occurs, part of the current flows outside the live conductors, creating an imbalance. This imbalance induces a magnetic flux inside the transformer core, and the output winding generates a current that activatesthe trip relay. The relay then triggers the switching mechanism, causing the contacts of the RCCBto open and disconnect the circuit.

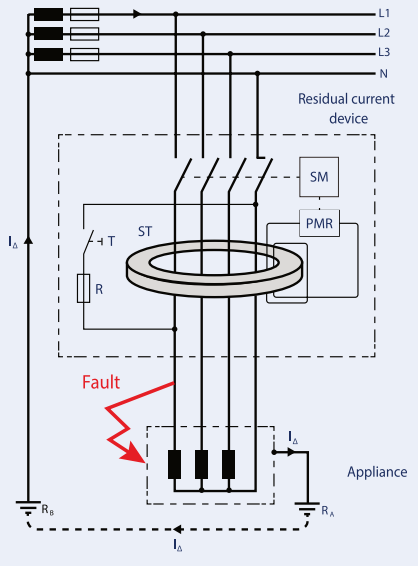

SM	switching mechanism
PMR	permanent magnet relay
ST	summation current transformer
T	test button
R	resistor
I_Δ	residual current
R_A	appliance earthing resistance
R_B	power supply earthing resistance

TT net work is used for description here, but the same applies analogously for other net work types.

Summation Current Transformer and Switching Mechanism

The summation current transformer is usually designed as a ring-shaped transformer. Permalloy is commonly used as the magnetic material, while newer types may employ advanced magnetic materials with nanocrystalline structures. The core of a voltage-dependent RCCBis a trip relay with a permanent magnet (PMR).

In idle state, the relay armature is held by the permanent magnet. Once current is conducted into the excitation coil, the attraction force of the magnet is reduced, allowing the spring force to move the relay armature. Due to its simplicity and proven reliability, this type of polarized relay is widely used.

The switching mechanism of the RCCBmust be both sensitive and strong enough to ensure reliable operation of the contacts. Each load current path must be capable of carrying the rated current throughout the service life of the device. The distance between open contacts must provide safe insulation, and contacts must be protected from surge currents and presumed short-circuit currents.

For multi-pole types, the neutral conductor (N) contacts must close before and open after the phase conductor (L) contacts. This prevents unwanted surge voltages in the phases. All RCCBsmust be equipped with a testing device consisting of a test button (T) and a resistor (R) appropriate to the operating voltage. The test button must be easily accessible to the user. When pressed, it simulates residual current using the test resistor, forcing current to flow outside the summation transformer.

Sensitivity to Various Types of Residual Currents

According to their sensitivity, RCCBsare classified into Type AC, Type A, and Type B.

Over time, additional variants have been developed to meet practical requirements.

• Type AC: Intended only for alternating residual currents. Pulsating DC components of residual current may impair sensitivity or block tripping (IEC/EN61008).

• Type A: Detects alternating and pulsating DC residual currents, possibly including smooth DC residual currents up to 6 mA (IEC/EN 61008).

• Type B: Detects all types of residual currents (alternating, pulsating DC, and smooth DC residual currents) (IEC/EN 62423). Type B devices are essential in installations with frequency inverters, photovoltaic systems, and equipment with power semiconductors.

The fundamental difference between Type AC, A, and B lies in the type of material used for the core of the summation current transformer.

Hysteresis Curves Of Materials Of Type Ac And A Summation Current Transformers

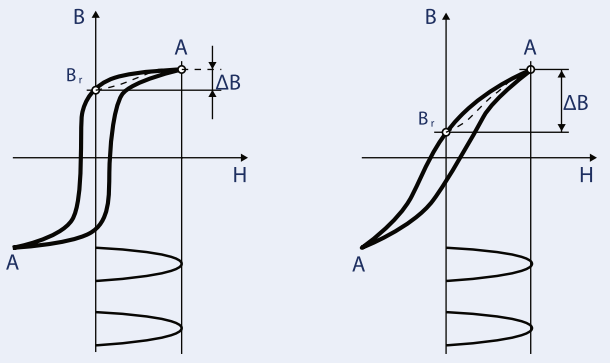

Type AC
Higher remanence (Br)

Type AC
Lower remanence (Br)

B-magnetic induction [T]
H-magnetomotoric force [Am^{-1}]
A-working point for alternate current

Types Of Rccb By Sensitivity To Types Of Current

RCCB type	Symbols	Sensitivity to residual current	Properties	Standards
AC		Alternating	Sinusoidal ACwith rated frequency	IEC/EN 61008 IEC/ EN 61009
A		Alternating and pulsating direct current	Sinusoidal Ac and pulsating DCupto 6 mA	IEC/ EN 61008 IEC/ EN 61009
B		Alternating and pulsating direct current and flat direct current	All kindsof current up to 1 kHz	IEC/TR 60755 IEC/ EN 62423

Limits Of Tripping Times Of Rccb In Tests By Alternating Residual Current

RCCB type		Tripping times (ms)			
		$I_\Delta = I_{\Delta n}$	$I_\Delta = 2\ I_{\Delta n}$	$I_\Delta = 5\ I_{\Delta n}$	$I_\Delta = 500$ A
☐	no delay - for general use	≤ 300	≤ 150	≤ 40	≤ 40
G	delayed with non-operation time min. 10 ms	10-300	10-150	10-40	10-40
S	selective-with non-operation time min. 40 ms	130-500	60-200	50-150	40-150

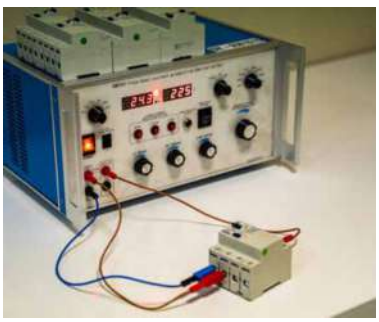



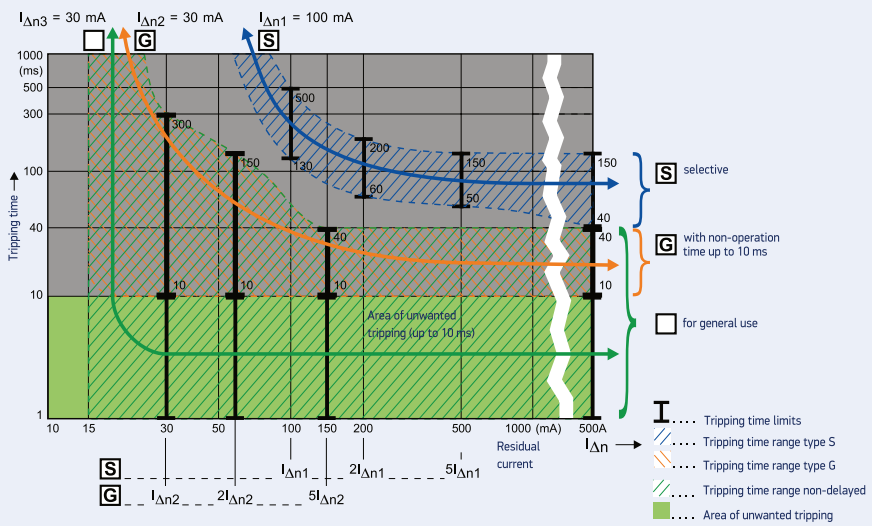

Fig. 20 Limits of tripping times

Resistance to Transient Surge Currents

To prevent nuisance tripping (unwanted tripping caused by impulse voltages) due to lightning surges, switching of high-capacitance circuits, or switching surges, RCCBs are designed with a high level of immunity to transient currents.

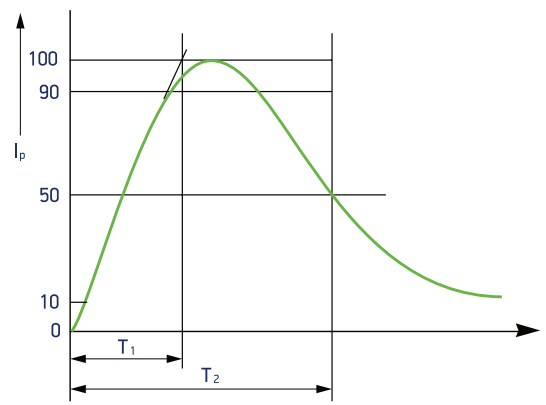

Shape of surge current wave 8/20 µs for tests of RCCB resistance to unwanted tripping

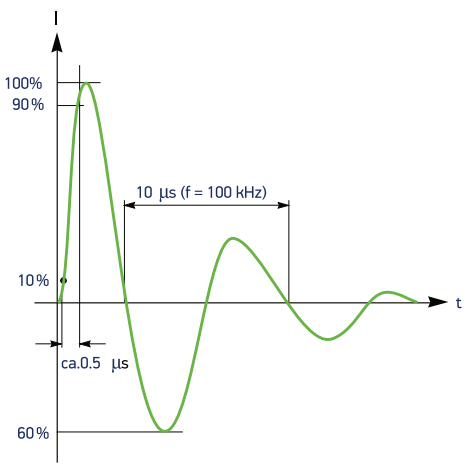

Shape of standardized damped surge current wave of 100kHz, 100/0,5µs

Electro-magnetic Type | RCBO | 6kA

DKR6-1

Residual Current Circuit Breaker with Overcurrent Protection



- Voltage: 230/240V AC systems (50/60Hz)
- Electro-magnetic type
- Current range: 6A to 32A
- AC and A types
- Rated residual current: 30, 100, 300mA
- Bidirectional wiring capability
- Tripping curves: Type B/C available
- Visual leakage fault indication window
- Breaking capacity: 6kA
- RCBO according to IEC/EN 61009-1
- Protects against overload, short circuit, and leakage faults

Applications



Main circuit protection in residential distribution systems



Lighting circuit control in commercial buildings



Power supply line protection for industrial equipment

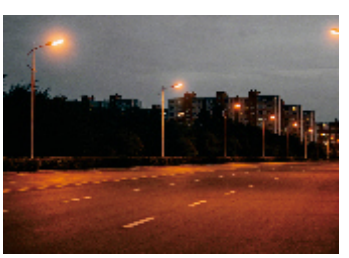

Electrical safety assurance in public facilities

Electro-magnetic Type | RCBO | 6kA

Overview

DKR6-1 Electromagnetic RCBO combine the functions of an RCCB and an MCB into a compact unit, providing protection for personnel,fire safety, and circuits.For personnel and fire protection, the residual current component—type AC—responds to sinusoidal AC residual currents, while type A also responds to pulsating DC residual currents.

RCBOs with a rated residual current of no more than 30 mA are used for personnel, equipment, and fire protection, as well as forsupplementary protection against direct contact.

The MCB component protects circuits against overload and short circuits, and is available in characteristics B and C. Assigning one RCBO to each individual branch circuit helps prevent nuisance tripping of fault-free circuits caused by the accumulation of operational leakage currents or transient current pulses during switching.

Each RCBO consists of a section for detecting residual currents and a section for detecting overcurrents. It is equipped with a time-delayed, temperature-dependent thermal release (thermal bimetal) for low-level overcurrents, and an instantaneous electromagnetic release for higher overload and short-circuit currents.

The use of specialized contact materials ensures a long service life and a high degree of protection against contact welding.

Product Tips

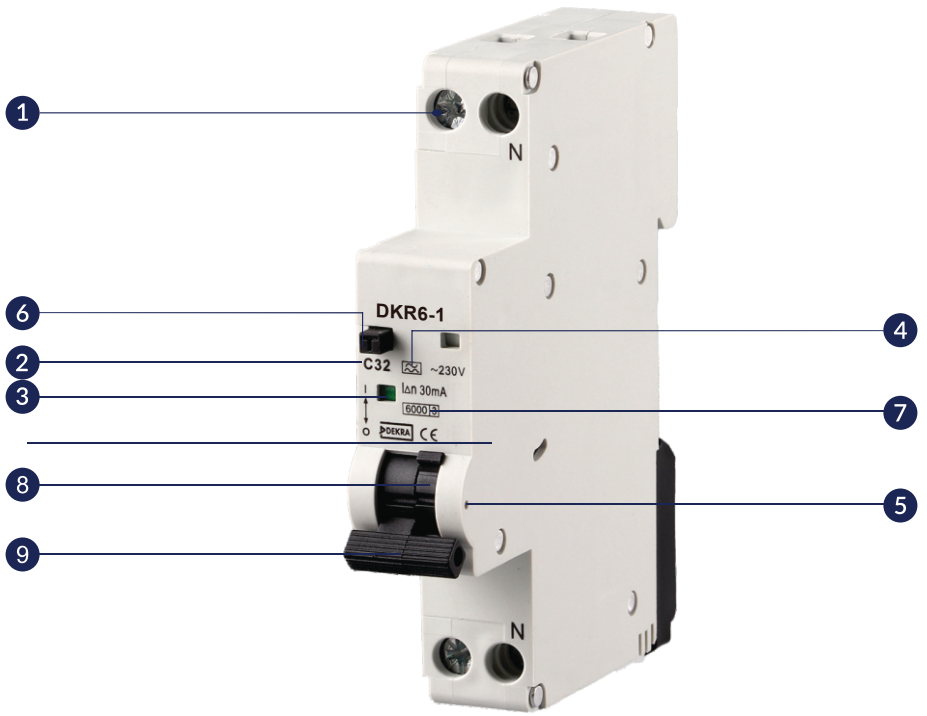

1. Live line interface
2. Tripping characteristics B, C
3. Contacts position indication window
4. Sensitivity to residual current AC, A
5. The position of handle Lock
6. Test button
7. Rated short circuit breaking capacity 6kA
8. The position of handle 1
9. The position of handle 2

Electro-magnetic Type | RCBO | 6kA

Wiring Diagram

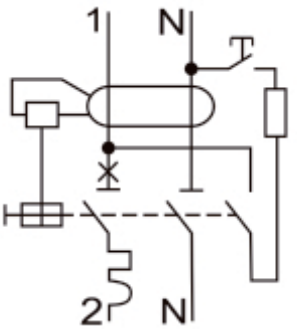

Dimension (mm)

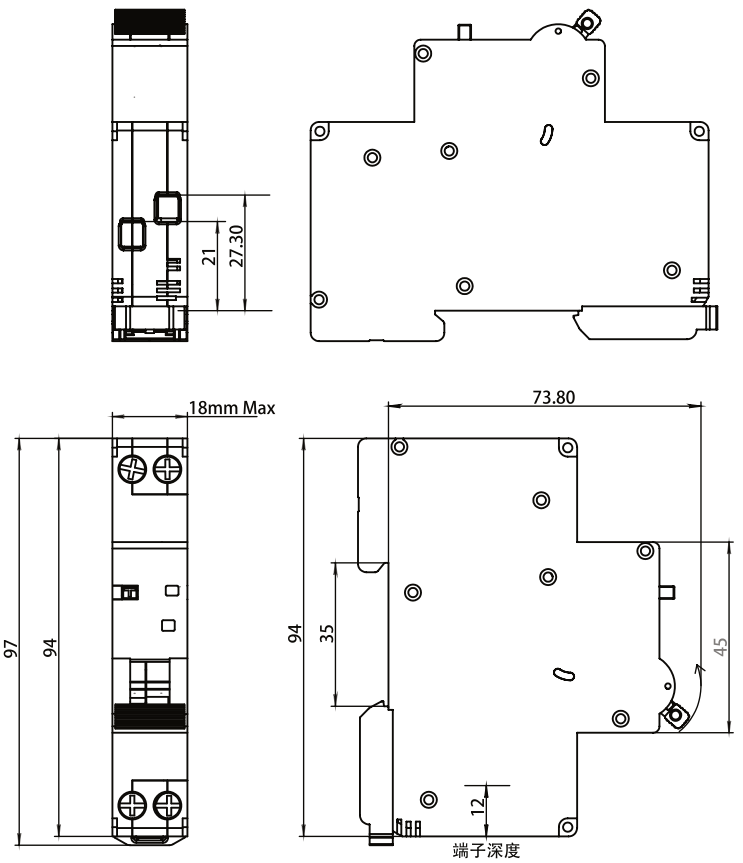

Applications

With a slim width of only 18 mm, the RCBO is an excellent choice for both new builds and retrofit projects—particularly in older buildings.

In new constructions, it saves 50 % space compared to the 2 MW version, enabling more compact distribution boards that are often more cost-effective.

For projects requiring individual residual current protection across numerous circuits, smaller distribution boards can be installed, resulting in significant cost savings.

In older buildings, existing 1-pole MCBs can be easily replaced with the DKR6-1 RCBO in just 1 MW—without requiring any additional space in the distribution board.

This upgrade enhances the level of protection in electrical circuits by adding personal safety features.
Compact pin busbar for fast connection of 1P+N compact devices in 1 MW.

The busbar's compact design makes it easy to connect devices even in narrow distribution boards.
Its innovative new design allows feeding at any point along the busbar without the need for additional feeder terminals.

Technical Data

Standard	IEC/EN 61009-1
Protection	Ground fault, Overcurrent and short circuit
Type of trip	Ground fault: Electromagnetic
	Overload and short circuit: Thermal-magnetic
Residual current type	AC type - AC residual current
	A type - residual AC and pulsating DC current
No. of poles	1P+N, Neutral pole switchable
Insulation voltage (Ui)	500V
Rated voltage (Ue)	230/240V~
Rated currents (In)	6, 10, 16, 20, 25, 32A
Rated sensitivity currents (I∆n)	10, 30, 100, 300mA
Residual current off-time under (I∆n)	≤0.1s
Rated residual making and breaking capacity (I∆m)	500A (In≤50A); 10In (In>50A)
Rated frequency	50/60Hz
Rated short-circuit capacity (Icn)	ZSR6-1:6kA
Energy limiting class	3
Rated impulse withstand voltage (Uimp) (1.2/50μs)	4kV
Dielectric test voltage	2kV (50/60Hz,1 min.)
Fire resistance (glow-wire test)	960±15°C (Enclosure); 650±10°C (Handle)
Thermal tripping characteristics	1.13In No tripping within an hour; 1.45In Tripping within an hour
Instantaneous tripping characteristics	B: 3In-5In; C: 5In-10In
Electrical life	4,000 Cycles
Mechanical life	8,000 Cycles
Contact position indicator	green OFF / red ON
Protection degree	IP20
Ambient temperature	-25°C ~ +55°C
Storage temperature	-30°C ~ +70°C
Terminal connection type	Cable/ Pin-type/ Fork-type busbar
Max. terminal size for cable	Line side (bottom): 25mm²; Load side (top) : 16mm² (For 16mm² conductors: crimping terminal lug is mandatory.)
Max. tightening torque	Bottom (line side): 2.5N.m; Top (Load side) : 1.2N.m
Neutral load cable	Bule, 500mm length, 4mm² (Other lengths available upon request)
Functional earth cable	White, 500mm length, 0.6mm² (Other lengths available upon request)
Installation	Mounting on 35mm DIN rail
Incoming method	Bi-Directional

Auxiliary for remote tripping or signaling	
Auxiliary Contact	Yes
Auxiliary & Alarm Contact	Yes
Shunt Release	Yes
Shunt Release & Auxiliary Contact	Yes
Voltage Loss Release	Yes
Over-voltage Release	Yes
Undervoltage Release	Yes
Over-undervoltage Release	Yes

RCD Type

	**Type AC** RCDs detect slowly increasing sinusoidal AC residual currents.
	**Type A** RCDs detect AC leakage currents and pulsed DC leakage currents below 6mA.

Tripping Sensitivity

30mA	This is the most commonly used protection level in homes and commercial buildings, and is suitable for socket protection in general residential environments, offices and commercial places.
100mA	Usually used in situations where personal protection requirements are not as strict as 30mA, or for equipment protection, such as air conditioning systems, industrial equipment, etc.
300mA	Mainly used for fire protection,such as distribution boards and general protection of large electrical equipment.

Tripping Characteristics

Curve	Rated current	Condition						
		Thermal release				Magnetic release		
		Non-trip	Trip	Non-trip time	Trip time	Hold current	Trip current	Trip time
B	6-40A	1.13×In		≤1h		3×In		≥0.1
			1.45×In		<1h		5×In	<0.1
C	6-40A	1.13×In		≤1h		5×In		≥0.1
			1.45×In		<1h		10×In	<0.1

B curve

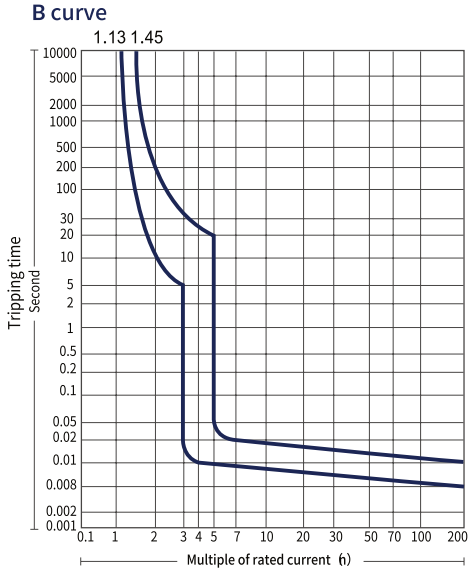

Universal use
- socket outlet, lighting device

C curve

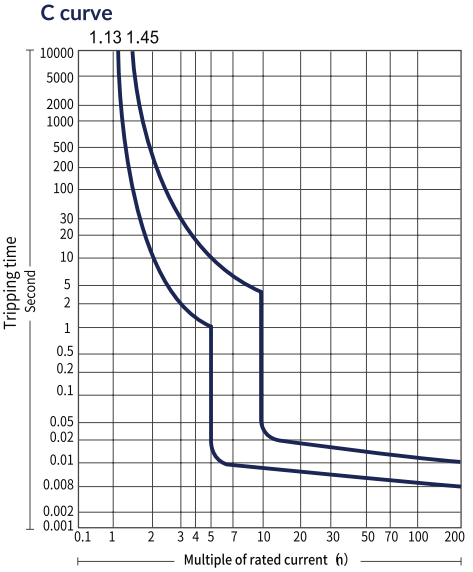

Resistive & inductive loads with low inruch current
- lamp, high starting current motor

Residual Current Circuit Breaker With Overcurrent Protection

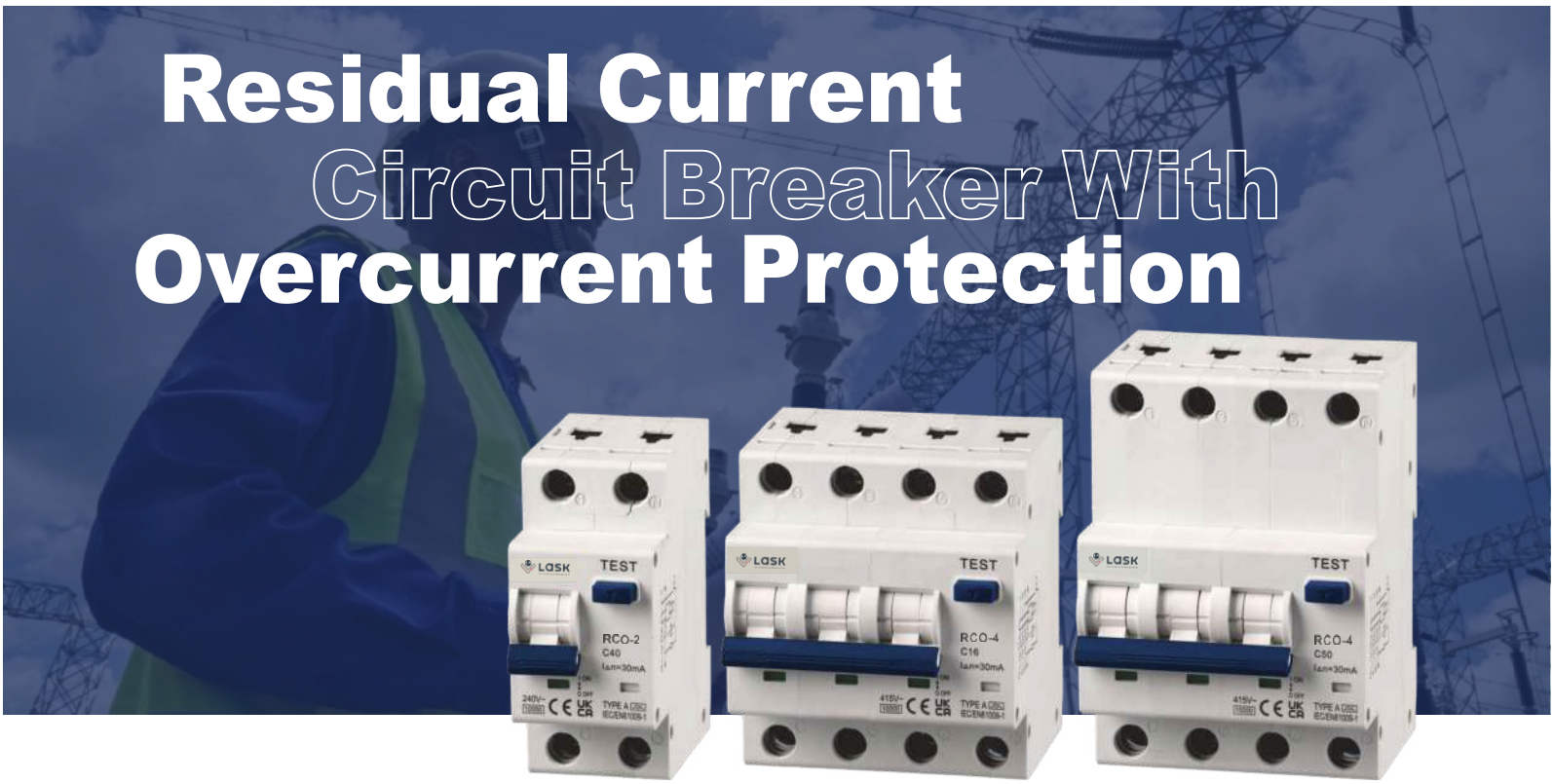

General

The RCO Series Residual Current Operated Circuit Breakers with Overcurrent Protection (RCBOs) are suitable for AC systems with a frequency of 50/60 Hz, rated voltage 240V/415V, and rated current up to 63A. They provide protection against overloads, short circuits, and residual currents.

The RCBO quickly disconnects the power supply if a person is at risk of electric shock or if the circuit leakage current exceeds the preset value, ensuring the safety of both people and equipment.

RCO Series RCBOs can be applied in residential, commercial, industrial, and high-rise building installations. They are also suitable for infrequent switching of lines under normal operating conditions.

The series includes devices classified according to detectable residual current waveforms:

- Type B: Protection against sinusoidal AC residual currents, pulsed DC residual currents, alternating residual sinusoidal currents up to 1000 Hz, pulsating DC residual currents, and smooth DC residual currents, whether applied suddenly or gradually.
- Type B+: Extended sensitivity version of Type B, offering protection up to higher frequency ranges (kHz level), suitable for installations with power electronics, photovoltaic systems, and frequency converters.

Technical parameters

The tripping characteristic curves are as shown below.

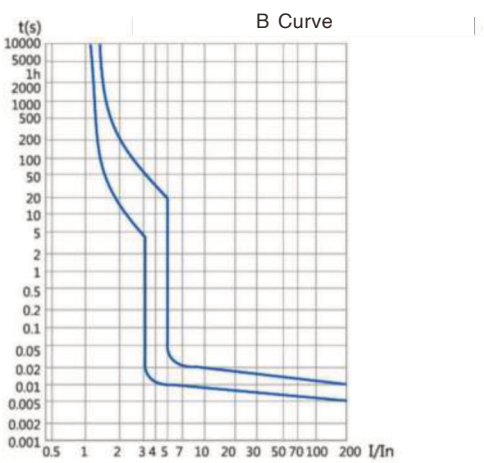

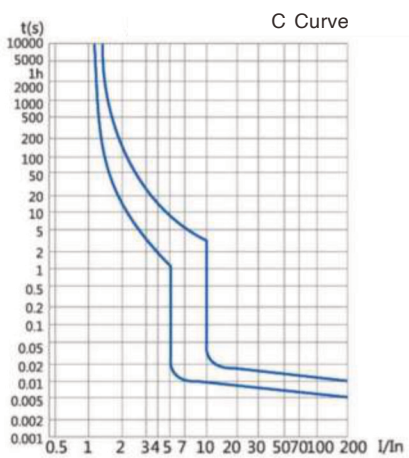

I RCBO Residual Current Circuit Breaker With Overcurrent Protection

Basic Parameters

Type		B Electrical	B+ Electrical
Design according to		IEC/EN 62423,IEC/EN 61009-1,OVE E8601	
			VDE 0664-400
Current test marks as printed onto the device		2P:2301240V AC	
Rated voltage Un		4P: 4001415V AC 50/60Hz	
Rated frequency fn		"A type functionality: voltage independent	
Mode of operation		B and B+ type functionality: voltage dependent"	
Operation yoltage electronic		50-264V AC 2P:184-264VAC	
Voltage range test circuit		4P:184-440VAC	
Rated current In		6A,10A,13A,16A,20A,25A,32A,40A,63A	
Rated residual operating current I△n	Instantaneous	30mA,100mA,300mA,500mA	30mA,100mA,300mA
	K-short time delayed (G, ASi)	30mA,100mA,300mA,500mA	30mA,100mA,300mA
	S- selective	100mA,300mA,500mA	100mA,300mA
Sensitivity		Altemating, pulsed and smooth direct currents	
		High frequency up to 1 kHz	High frequency up to 20kHz
Tripping Curve		B:(3-5)In, C:(5-10)In	
Rated insulation voltage Ui		500 V	
Rated impulse withstand voltage Uimp		4 kV (1.2150μs)	
Rated conditional short-circuit current Inc		6KA 10kA	
Rated making and breaking capacity Im		3000A	
Peak withstand current		3 kA (8/20 μs) surge current proof	
		5 kA (8/20 μs) surge current proof for type S	
Electrical isolation		>4 mm contact space	
Endurance (operating cycles)	Electrical components	≥2000	
	Mechanical components	≥ 4000	
Mechanical			
Degree of protection		IP20	
Upper and lower terminals		open mounted /lift terminals	
Temminal capacity		1-25 mm^2	
Terminal torque		2 -2.5 Nm	
Busbar thickness		0.8-2 mm	
Operating temperature		-25°C ...+55°C	
Storage- and transport temperature		-40'C ...+70°C	
Resistanceto climatic conditions		IEC/EN 61009	
Contact position indicator		Mechanical red / green	
Supply possibility		Top or battom	
Mounting position		Any	

The Over-current Protection Characteristics

No.	Rated current	Initial state	Test current(A)	Specified time(t)	Expected result	Remarks
a	6~63	Cold state	1. 13 In	t ≥1h	Non-tripping	
b		Immediately after sequence a	1. 45 In	t< 1h	Tripping	Increase to the specified current within 5safter test itema.
		Cold state	2. 55 In	1s<t<60s	Tripping	
		Cold state	3 In	t≥0.1s	Non-tripping	Curve B
c		Cold state	5 In	t<0.1s	Tripping	Curve B
d		Cold state	5 In	t≥0.1s	Non-tripping	Curve C
		Cold state	10 In	t<0.1s	Tripping	Curve C

LASK
Ihr Elektro & Baupartner

I MCBIsolator



MBC-ISO

Product Advantage

- Ambient air temperature: Average ambient temperature not exceeding 35 °C within 24 hours.
- Altitude: Installation site altitude not exceeding 2000 m.
- Atmospheric conditions: Relative humidity not exceeding 50% at a maximum temperature of +40 °C; at +20 °C, relative humidity may reach up to 90%.
- Installation method: Standard DIN rail installation (TH35-7.5).
- Pollution class: Class III.
- Connection mode: Screwconnection.

Technical Parameters

Types	Values
Rated current(Ie)	20A,25A,32A,63A,80A,100A,125A
Poles	1P、2P、3P、4P
Rated voltage(Ue)	240V1415VAC(1P),415VAC(2P、3P、4P)
Rated insulation voltage(Ui)	400V
Rated working current (Ie)	20A,25A,32A,63A,80A,100A.125A
Rated impulse withstand voltage Uimp	4Kv(2000m)
Rated short time withstand current(Icw)	12Ie, 1s
Rated short circuit making capacity(Icm)	20Ie,0.1s
Rated making and breaking capacity	3Ie,1.05Ue, cosΦ=0.65
Mechanical and electrical life	Mechanical life 8500 Times Electrical life 3000 Times
Connection wire	See Form 1
Operated ambient temperature	-5~+40
Stored ambient temperature ℃	-25~+70
Pollution level	2
Protection level	IP20
Mounting type	I I

Lask
Ihr Elektro & Baupartner

I SPD Surge Protector Device



Product advantage

- Multilayer spark gap deviceIntegrated surge protector unit
- Highest to withstand 50kA(10/350us)lightning shock
- Action response time is less than 100ns

L1、L2、L3、N、PE(4+0 circuit)

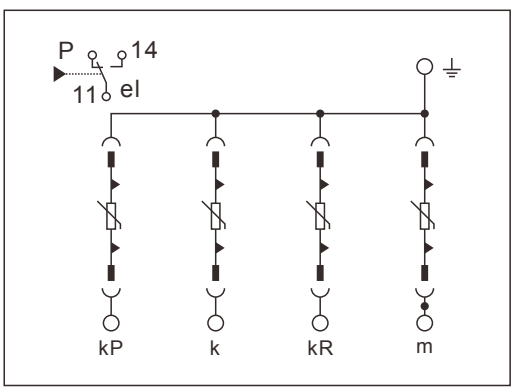

L1、L2、L3、N、PE(3+1 circuit)

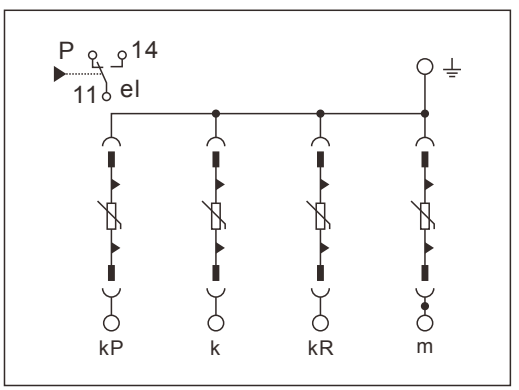

Technical Parameters

		DK-A15				DK-A25			
IEC TYPE		I, T1				I, T1			
SPECS		1P	2P	3P	4P	1P	2P	3P	4P
Nominal voltage(Un)		220V AC		380V AC		220V AC		380V AC	
Maximum Continuous Operating Voltage(Uc)	L-N	275V AC	275V AC	385V AC	385V AC	275V AC	275V AC	385V AC	385V AC
	N-PE	275V AC	275V AC	· ····	385V AC	275V AC	275V AC	· ····	385V AC
	L-PEN	275V AC	· ····	385V AC	· ···	275V AC	· ····	385V AC	· ····
Nominal Discharge Current(In)8/20μs	L-N	15kA				25kA			
Maximum Discharge Current(Imax)8/20μs	N-PE	15kA				25kA			
Voltage Protection Level(Up)8/20μs	L-N	1.8kV				2.0kV			
	N-PE	1.8kV				2.0kV			
Short-circuit Current Rating(Iscpv)		25kA				25kA			
Response Time	L-N	≤25ns				≤25ns			
Indication		Green:Normal Red:Failure				Green:Normal Red:Failure			
Connection cross-section		4-35mm²				4-35mm²			
Din Rail Installation		35mm(EN50022/DIN46277-3)				35mm(EN50022/DIN46277-3)			
Temperature range		-40~70℃				-40~70℃			
Shell Material		Plastic to UL91V-00				Plastic to UL91V-0			
Protect Rating		Ip20				Ip20			
Standard		IEC 61643-1				IEC 61643-1			
Remote communication alarm		Open/Close Contact Terminals				Open/Close Contact Terminals			
Remote communication wiring		Maximum 1.5mm single/flexible wire				Maximum 1.5mm single /flexible wire			

Outline dimension

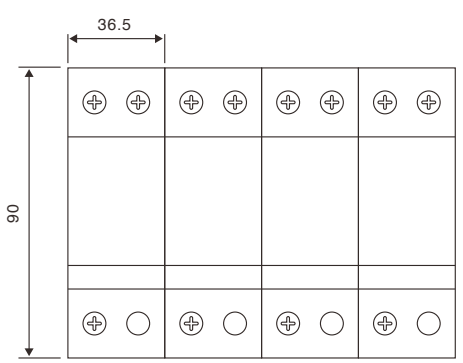

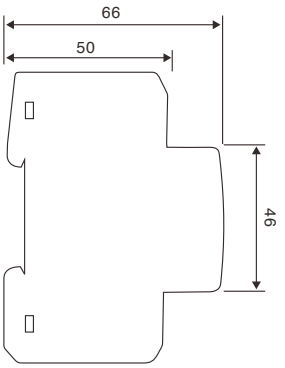

LASK
Ihr Elektro & Baupartner

I SPD Surge Protector Device



For installation at LPZ O_A-1 or higher, protecting d.c power supply system from surge damages. Applied in pluggable SPD Class I+II(Class B+C) for various d.c.power supply system. Designed according to IEC 61643-1.

Product advantage

- Pluggable module, easy for installation and main tenance
- High discharge capacity, quick response
- Double thermal disconnection devices,provide more reliable protection
- Multifunctional terminals for connection of conductorsand busbars
- Green window will change when fault occurs,also provide remote alarm terminal

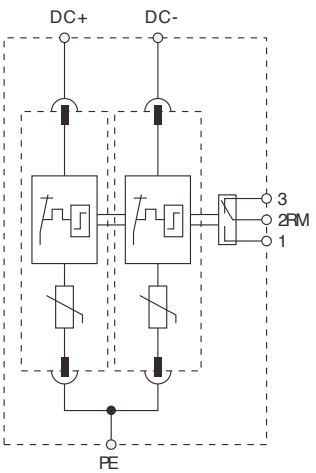

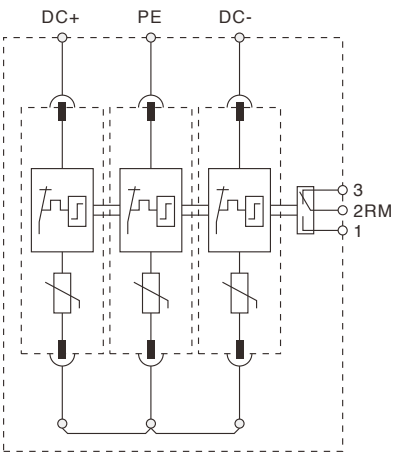

Technical Parameters

Type	DK-T2-DC / 2P	DK-T2-DC / 3P
Rated voltage (max.continuous a.c.voltage) [U_c]	800VDC / 1000VDC / 1200VDC	
Nominal discharge current (8/20) [I_n]	20kA	
Maximum discharge current [Imax]	40kA	
Voltage protection level [U_p]	3.2kV / 4.0kV / 4.4kV	
Response time [t_A]	≤25ns	
Max.backup fuse	125A gL/gG	
Operating temperature range [T_{up}]	-40°C...+60°C	
Cross-sectional area	1.5mm^2~2.5mm^2 solid / 35mm^2 flexible	
Mounting on	35mm DIN rail	
Enclosure material	Purple (module) / light gray (base) thermoplastic,UL94-V0	
Dimension	1 mods	
Test standards	IEC 61643-1; YD/T 1235.1	
Certification	CE ROHS ISO9001 TUV	
Type of remote signalling contact	Switching contact	
Switching capacity a.c	250V / 0.5A	
Switching capacity d.c	250V / 0.1A; 125v/0.2A; 75v/0.5A	
Cross-sectional area for remote signalling contact	Max. 1.5mm^2 solid / flexible	

Type	WR-T1T2-DC / 2P	WR-T1T2-DC / 3P
Packing unit	1pc(s)	1pc(s)
Weight	206g	283g

Outline dimension

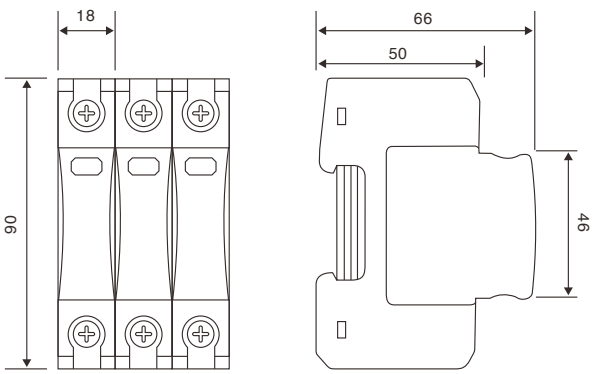



Molded Case Circuit Breaker

General

This switch is designed for opening and closing circuits in standard switching applications. It has a breaking capacity range of 18 kA to 50 kA, available in both fixed and adjustable versions, with rated current options ranging from 16 A to 800 A.

Product Advantage

- Dual rotary contact structure: The DK Series employs a dual rotary contact design with an energy release system to provide stable, reliable protection and excellent current-limiting performance.
  Protective transparent cover: The transparent aluminum cover safeguards the trip unit and allows the installation of rotary handles, motor operation mechanisms, and other accessories.
  Altitude suitability: Designed for installation at sites with altitudes up to 2,000 m.
  Operating temperature range: –25 °C to +70 °C. For ambient temperatures above +40 °C (or +65 °C for circuit breakers protecting motor feeders), derating is required.
- Environmental durability: Resistantto humid air, salt spray, oil mist, and mold.
- Safe installation: Must be installed in environments free of explosion hazards, conductive dust, or substances that could corrode metal or damage insulation.
- Outdoor conditions: Suitable for use in locations without direct exposure to rain or snow.
- Pollution degree: Class3.
- Installation category: Category III.



Fixed Type



Adjustable Type



Adjustable Leakage Type

MCCB Molded Case Circuit Breaker

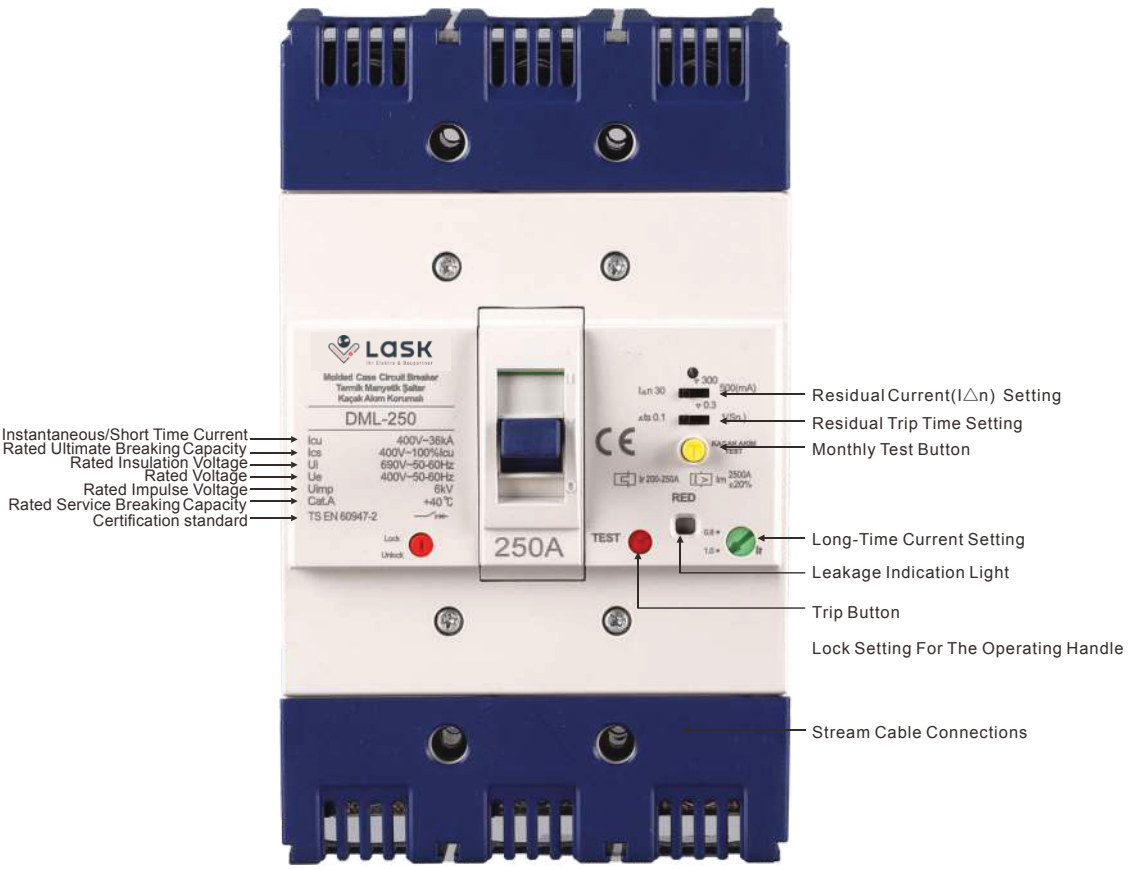

Product Characteristics

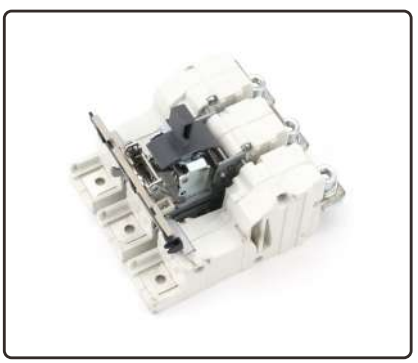

Security
The module housing is made of high-strength heat-resistant material. Achieve electrical isolation between phases and operating mechanisms. To ensure the safety of users and eliminate phase-to-phase current short circuit.



Reliability
The closed structure design further protects the rotating and moving conductors from the external environments and makes the electrical contacts more reliable.



High Performance
Gas-producing material is adopted in the module to produce gas flow when the gas-producing short-circuit current is generated. Obviously improve the effect of air blowing, to achieve a better current limiting effect, the product break index increased significantly.

I MCCB Molded Case Circuit Breaker

DMF Fixed Type



		DMF-160		DMF-250	
Type		S-Type	H-Type	S-Type	H-Type
Pole		2-pole		-	
		3-pole		3-pole	
		4-pole		4-pole	
Rated current,In	A	16、20、25、32、40、50、63、80、100、125 、160		100、125、160、180、200、225、250	
Adjustable parts	Long-time current setting(0.8In~1.0In)	-	-	-	-
	Lockup device for operating handle	-	-	-	-
Rated voltage,Ue	AC(V)	230、400、440			
Rated insulation voltage,Ui	V	750V			
Rated impulse voltage,Uimp	kV	8			
Standard		IEC/EN 60947-2			
Rated frequency	Hz	50 / 60			
Rated short-circuit breaking capacity(Icu)kA					
AC	230V	50kA	65kA	65kA	80kA
	400V	25kA	35kA	35kA	50kA
	440V	22kA	25kA	25kA	35kA
Ics=%*Icu		50~100	50~100	50~100	50~100
Mechanical life(circle)		20,000 / 8,500(As defined by IEC/EN 60947-2)		20,000 / 7,000(As defined by IEC/EN 60947-2)	
Electrical life(circle)		4,000 / 1,500(As defined by IEC/EN 60947-2)		4,000 / 1,000(As defined by IEC/EN 60947-2)	
Dimensions W* L* H(mm)	2P	50*60*140		-	
	3P	75*60*140		105*60*175	
	4P	100*60*140		140*60*175	

I MCCB Molded Case Circuit Breaker

DMA Adjustable Type



		DMA-160		DMA-250	
Type		S-Type	H-Type	S-Type	H-Type
Pole		2-pole		-	
		3-pole		3-pole	
		4-pole		4-pole	
Rated current,In	A	10-16A、16-20A、20-25A、25-32A、32-40A、40-50A、 50-63A、63-80A、80-100A、100-125A、125-160A		100-125A、125-160A、 160-200A、200-250A	
Adjustable parts	Long-time current setting(0.8In~1.0In)	√	√	√	√
	Lockup device for operating handle	-	-	-	-
Rated voltage,Ue	AC(V)	230、400、440			
Rated insulation voltage,Ui	V	750V			
Rated impulse voltage,Uimp	kV	8			
Standard		IEC/EN 60947-2			
Rated frequency	Hz	50 / 60			
Rated short-circuit breaking capacity(Icu)kA					
AC	230V	50kA	65kA	65kA	80kA
	400V	25kA	35kA	35kA	50kA
	440V	22kA	25kA	25kA	35kA
Ics=%*Icu		50~100	50~100	50~100	50~100
Mechanical life(circle)		20,000 / 8,500(As defined by IEC/EN 60947-2)		20,000 / 7,000(As defined by IEC/EN 60947-2)	
Electrical life(circle)		4,000 / 1,500(As defined by IEC/EN 60947-2)		4,000 / 1,000(As defined by IEC/EN 60947-2)	
Dimensions W* L* H(mm) 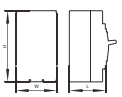	2P	50*60*140		-	
	3P	75*60*140		105*60*175	
	4P	100*60*140		140*60*175	

I MCCB Molded Case Circuit Breaker

DML Adjustable-Leakage Type



		DML-125						DML-250			
Type		S-Type			H-Type			S-Type		H-Type	
Pole		2-pole	3-pole	4-pole	2-pole	3-pole	4-pole	3-pole	4-pole	3-pole	4-pole
Protective function		Overload & Short-circuit & Ground fault									
Rated current,In	A	10-16A、16-20A、20-25A、25-32A、32-40A、40-50A、50-63A、63-80A、80-100A、100-125A						100-125A、125-160A、160-200A、200-250A			
Rated residual current	Operating,I△n(mA)	30、50、100、200、500									
	Non-Operating,I△no(mA)	15、25、50、100、250									
Adjustable parts	Long-time current setting(0.8In~1.0In)	√			√			√		√	
	Lockup device for operating handle	-	√	√	-	√	√	√	√	√	√
	Residual current(I△n) setting	30mA / 300mA / 500mA									
	Residual trip time setting	0.1s / 0.3s / 1s									
Rated voltage,Ue	AC(V)	230、400、440									
Rated insulation voltage,Ui	V	690V									
Rated impulse voltage,Uimp	kV	6									
Residual current off-time at I△n	Sec	0.1 / 0.3 / 1									
Standard		IEC / EN 60947-2									
Rated frequency	Hz	50 / 60									
Rated short-circuit breaking capacity(Icu)kA											
AC	230V	50kA			65kA			65kA		80kA	
	400V	25kA			35kA			35kA		50kA	
	440V	22kA			25kA			25kA		35kA	
Ics=%*Icu		50~100			50~100			50~100		50~100	
Mechanical life(circle)		20,000 / 8,500(As defined by IEC/EN 60947-2)						20,000 / 7,000(As defined by IEC/EN 60947-2)			
Electrical life(circle)		4,000 / 1,500(As defined by IEC/EN 60947-2)						4,000 / 1,000(As defined by IEC/EN 60947-2)			
Dimensions W* L* H(mm)	2P	50*60*140						-			
	3P	75*60*140						105*60*175			
	4P	100*60*140						140*60*175			

Built-out Accessory

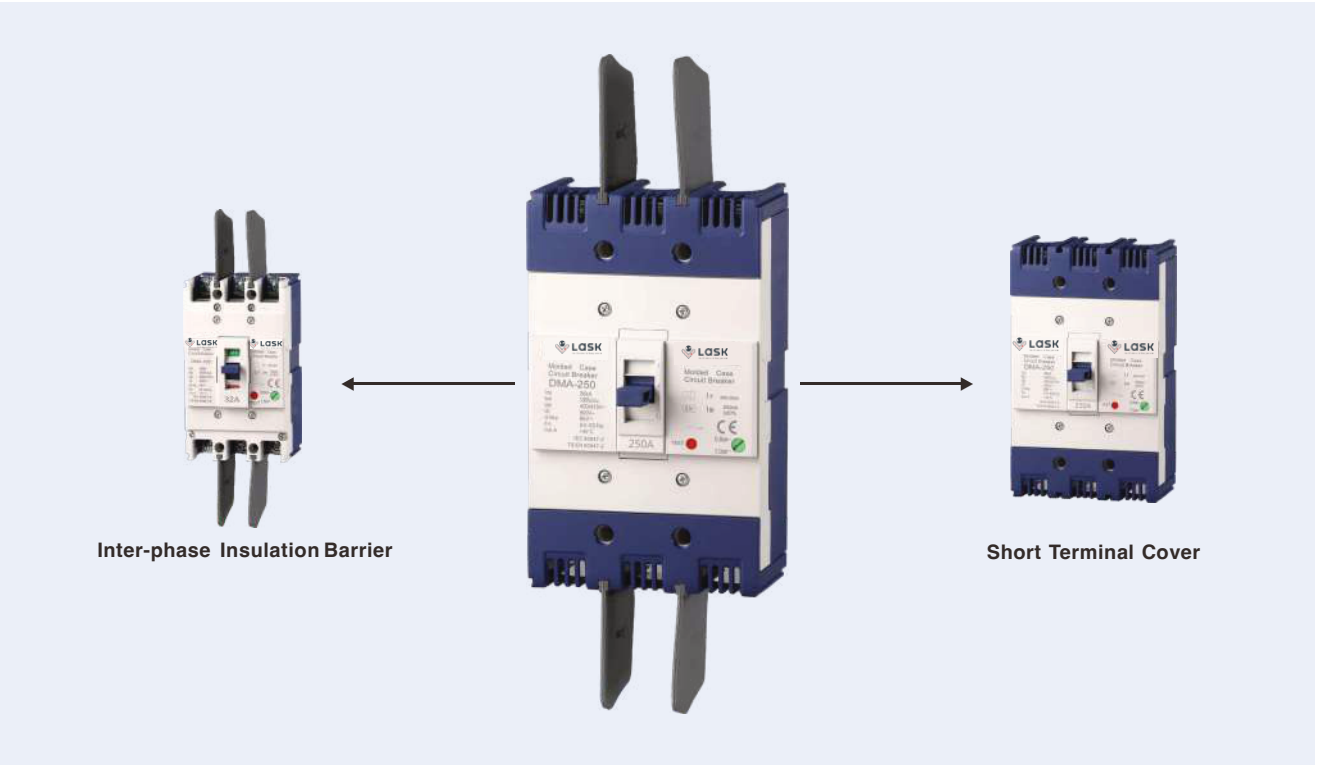

Built-Out Accessory



Inter-phase Insulation Barrier

- Inter-phase insulation barrier is safety accessory,which is used for the insulation between the phases.It can guarantee the best insulation of the wiring terminal.
- They are compatible with the short terminal covers. And it is OKto mount the inter-phase insulation barrier in both DK seriesand every phase(2P,3Pand 4P).



Short Terminal Cover

- Short terminal cover is insulation accessory,which is used to prevent the direct contact between the terminal in circuit breaker and other live parts to ensure the safety of the users.
- All the terminal cover is designed with holes which can be knocked off to connect the cables of various wiresand the copper platens.
- They are compatible with both the interphase insulation barrier and suitable for same phase& ampere frame of both MCCB/ELCBseries.



Copper Connection Bar(CCB)

- Copper connection bar is connection accessories,which is used to connect wire/cable or any other conductor together with MCCB/ELCBseries.
- They are suitable for same phase and same ampere frame of both MCCB/ELCBseries

I MCCB Molded Case Circuit Breaker

Built-in Accessory



Shunt trip (SHT)

- The shunt trip isan accessoryfor remote control.
- The shunt will trip when the input voltage is 70% - 110% of the rated operational voltage.(US)



Auxiliary switch (AX)(1NO+1NC)

- Auxiliary switch is used to indicate the " On" and " Off" status of the breaker
- Eachswitch has two contacts with a common connection.
- One isopen and the other closed when the circuit breaker isopen, and vice versa.



Alarm switch(AL)

- Alarm switchwill make immediate audio or visualindication in a tripped breaker due to overload, short circuit or shunt trip to remind people.
- This switch features a closed contact when the circuit breakeris tripped automatically.
- In other words, thisswitch doesnot function when the breaker isoperated manually



Combination switch(AX+AL)

- It hasone auxiliary switch(AX) and one alarm switch(AL) in a body to connect into the same position of the breaker.



Combination switch(AX+AX)(2NO+2NC)

- It hastwo auxiliary switch(AX) in a body to connect into the same position of the breaker.

Contact(AX+AL)

MCCB	ON	OFF	TRIP
AX	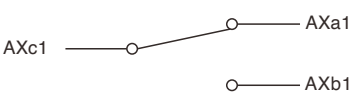	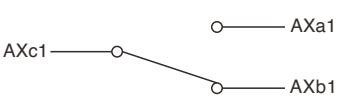	
AL	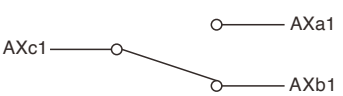		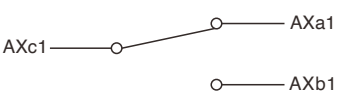

Built-in Accessory(UNA/UNF)

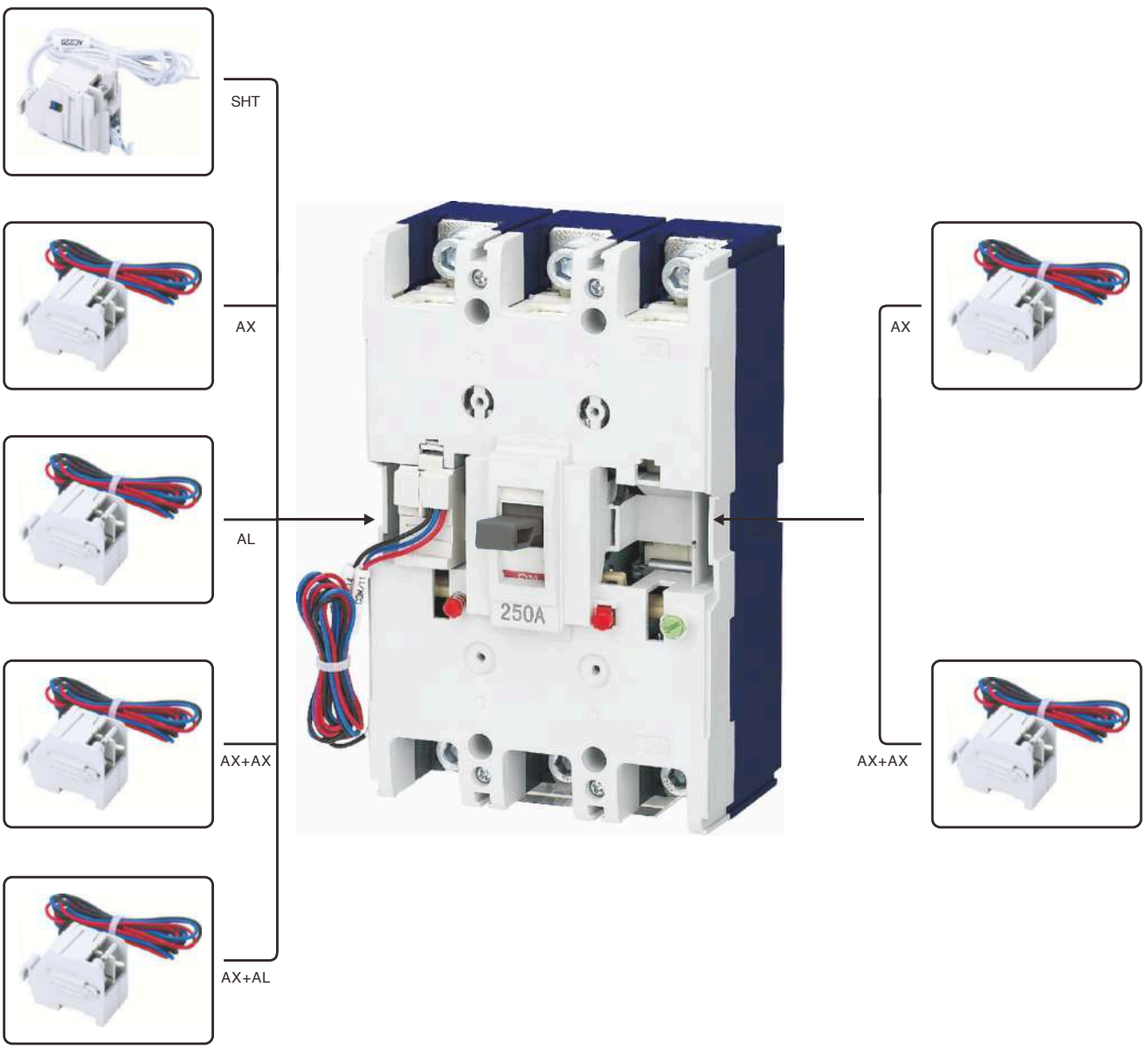

Maximum Possibilities

Type	Pole	Left hole position					Right hole position				
		AX	AL	SHT	AX+AX	AX+AL	AX	AL	SHT	AX+AX	AX+AL
DMA-160 DMF-160	3P	√	√	√	√	√	√	-	-	√	-
	4P	√	√	√	√	√	√	-	-	√	-
DMA-250 DMF-250	3P	√	√	√	√	√	√	-	-	√	-
	4P	√	√	√	√	√	√	-	-	√	-
DML-125	3P	√	√	√	√	√	-	-	-	-	-
	4P	√	√	√	√	√	-	-	-	-	-
DML-250	3P	√	√	√	√	√	-	-	-	-	-
	4P	√	√	√	√	√	-	-	-	-	-

Outline Dimensions

■ 125/160 Series

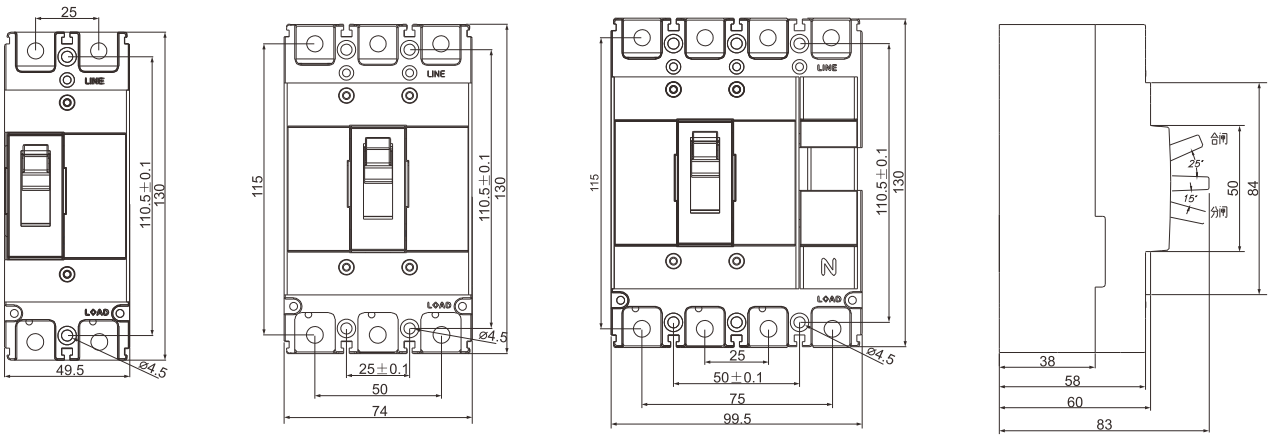

■ 250 Series

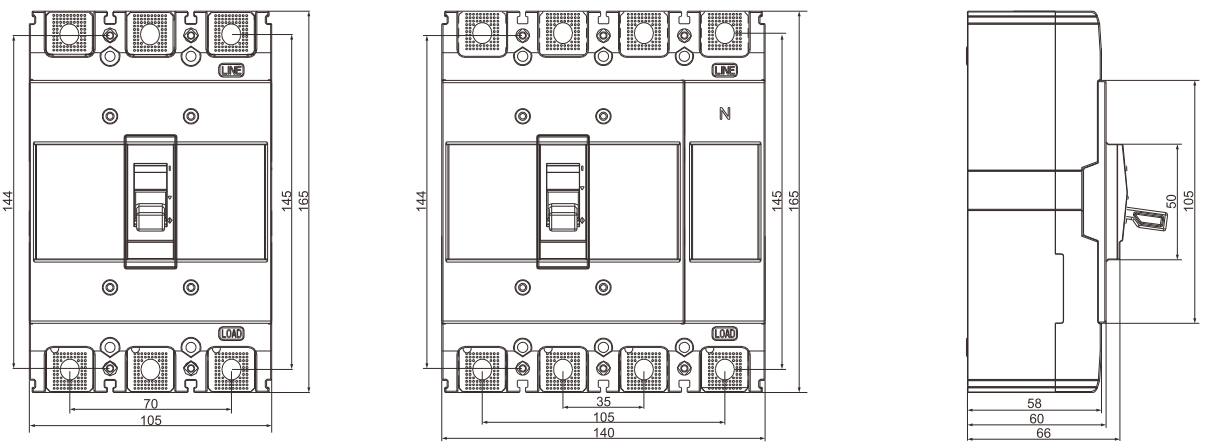

Thermal Magnetic Accessories

Description
1NO+ 1NC Aux.Contact for DMA/DMF/DML Series
2NO+ 2NC Aux.Contact for DMA/DMF/DML Series
Alarm contact for DMA/DMF/DML Series
230 V AC shunt trip coil for DMA/DMF/DML Series

LASK
Ihr Elektro & Baupartner

I MCCB Molded Case Circuit Breaker

DMF Fixed Type
DMA Adjustable Type



Model		DMF-400 DMA-400		DMF-630 DMA-630		DMF-800 DMA-800	
Type		3-pole	4-pole	3-pole	4-pole	3-pole	4-pole
Protective function		Overload & Short-circuit					
Rated current,In	A	225、250、315、350、400		400、500、630		630、700、800	
Rated insulation Voltage Ui	V	AC1000					
Rated Operating Voltage Ue	V	AC400/AC690					
Rated impulse Withstand Voltage Uimp	V	12000					
Arcing Distance(mm)		100					
Breaking Capacity Level	Hz	M	H	M	H	M	H
Rated Ultimate Short-Circuit Breaking Capacity Icu (kA)	AC690V	20		20		30	
	AC400V	70	100	70	100	75	100
Rated Service Short-Circuit Breaking Capacity Ics(kA)	AC690V	15		15		20	
	AC400V	70	75	70	75	75	75
Operating Performance (time)	Powered on	1000		1000		500	
	Powered off	4000		4000		2500	
	Total count	5000		5000		3000	
Dimensions W* L* H(mm)	2P	-		-		-	
	3P	150*149*257		185*155*270		210*160*280	
	4P	198*149*257		240*155*270		280*160*280	

I MCCB Molded Case Circuit Breaker

DML Adjustable-Leakage Type



Model		DML-400			DML-630			DML-800		
Type		3-pole		4-pole	3-pole		4-pole	3-pole		4-pole
Protective function		Overload & Short-circuit								
Rated current,In	A	225、250、315、350、400			400、500、630			630、700、800		
Rated insulation Voltage Ui	V	800								
Rated Operating Voltage Ue	V	AC400								
Rated impulse Withstand Voltage Uimp	V	8000								
Arcing Distance(mm)		100								
Breaking Capacity Level	Hz	L	M	H	L	M	H	L	M	H
Rated Ultimate Short-Circuit Breaking Capacity Icu (kA)	AC400V	50	65	100	50	65	100	50	65	100
Rated Service Short-Circuit Breaking Capacity Ics(kA)	AC400V	35	42	65	35	42	65	35	42	65
Operating Performance (time)	Powered on	1000			1000			500		
	Powered off	4000			4000			2500		
	Total count	5000			5000			3000		
Rated residual operating current	Non-delay type	100/300/500			300/500/1000			300/500/1000		
	Delayed type	100/300/500			300/500/1000			300/500/1000		
Residual current protection action time		5I△n			10I△n			10I△n		
Maximum breaking time	Non-delay type	0.04			0.04			0.04		
	Delayed type	0.4/1			0.4/1			0.4/1		
Dimensions W* L* H(mm)	2P	-			-			-		
	3P	257*149*150			270*155*185			280*160*210		
	4P	257*149*198			270*155*240			280*160*280		

Outline Dimensions

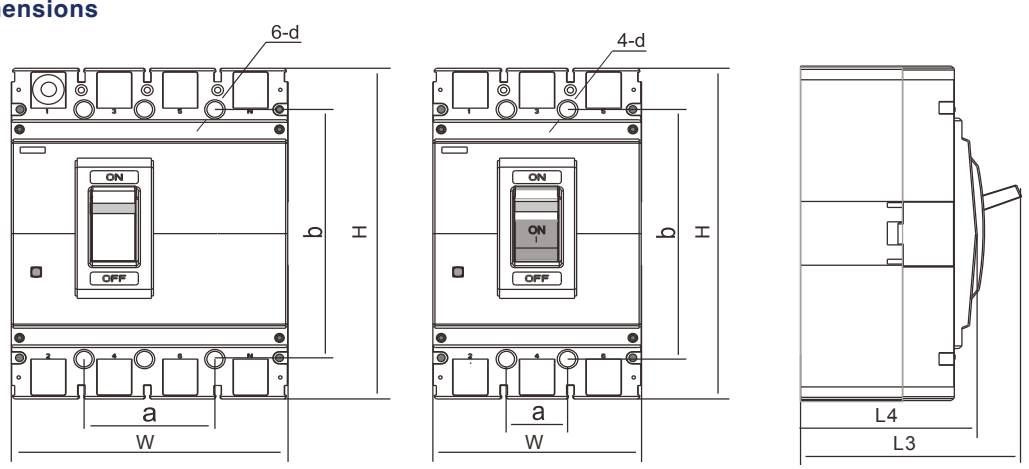

Thermal Magnetic Accessories

Model	Poles	Overall dimensions(mm)				Installation dimensions(mm)		
		W	H	L3	L4	a	b	d
DKA400 DMF400	3	150	257	149	117	44	194	Φ7
	4	198	257	149	117	94	194	Φ7
DKA630 DMF630	3	182	270	155	120	58	200	Φ7
	4	240	270	155	120	116	200	Φ7
DKA800 DMF800	3	210	280	160	125	70	243	Φ7
	4	280	280	160	125	140	243	Φ7

Outline Dimensions

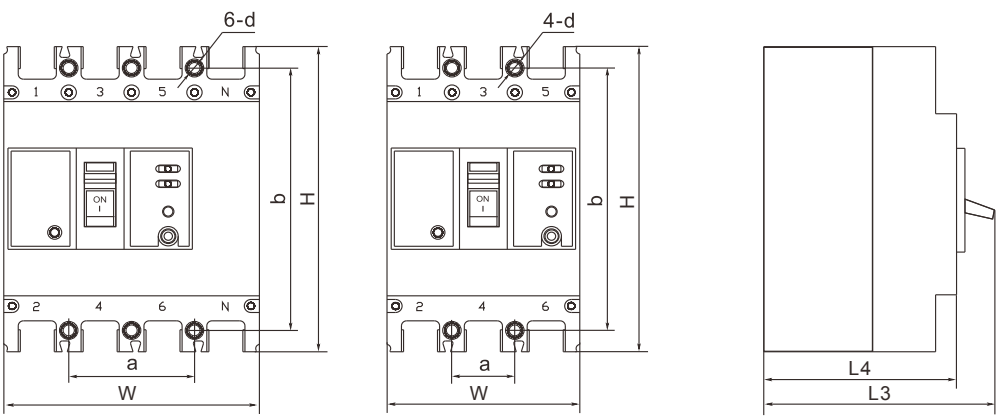

Thermal Magnetic Accessories

Model	Poles	Overall dimensions(mm)				Installation dimensions(mm)		
		W	H	L3	L4	a	b	d
DML-400	3	150	257	146	106	44	194	Φ7
	4	198	257	146	106	94	194	Φ7
DML-630	3	210	280	155	116	70	243	Φ7
	4	280	280	155	116	140	243	Φ7
DML-800	3	210	280	155	116	70	243	Φ7
	4	280	280	155	116	140	243	Φ7

DC MCCB



Main Technical Data

Model			DC MCCB				
Frame current			250	315	400		400V
Rated current (A)	In		63,80,100,140, 125,160,180, 200,225,250	280,300,315	250,315,350 400		250,315,350 400
Rated insulation voltage (V)	Ui		1500V				
Rated impulse withstand voltage (kV)	Uimp		12kV				
Type			DC	PV	DC	PV	DC
Rated operational voltage (V)	Ue	2PExternal Dimensions	DC250V、DC500V、DC750V、DC1000V、DC1500V		DC250V、DC500V、DC750V、DC1000V、DC1500V		DC250V、DC500V、DC750V、DC1000V、DC1500V
		3PExternal Dimensions	DC1000V、DC1250V、DC1500V		DC1000V、DC1500V		DC1000V、DC1500V
Rated Ultimate Short-circuit Breaking Capacity (kA)	Icu	2PExternal Dimensions	DC1000V：15 DC1500V：5	DC250V、DC500V：50 DC750V、DC1000V：25 DC1500V：7.5	DC250V、DC500V：25 DC750V、DC1000V：15 DC1500V：10	DC250V、DC500V：50 DC750V、DC1000V：25 DC1500V：10	DC250V、DC500V：70 DC750V、DC1000V：50 DC1250V、DC1500V：20
		3PExternal Dimensions	DC1500V：20	DC1000V、DC1250V、DC1500V：25	DC1000V：30 DC1500V：25	DC1000V：40 DC1500V：30	——
Rated service short-circuit breaking capacity (kA)	Ics		100%Icu				
Connection Method			2PExternal Dimensions(Pic1) 3PExternal Dimensions(Pic2)		2PExternal Dimensions(Pic1) 3PExternal Dimensions(Pic3)		2PExternal Dimensions(Pic1)
Isolation Function					Available		
Utilization Category	Cat.				A		
Mechanical Life	Times		20000		15000		
Electrical Life	Times		1500		1000		800
Arcing Distance	mm		≥50		≥100		
Dimensions	mm	2PExternal Dimensions	200 × 73 × 135		270 × 130× 156		275 × 106×178
		3PExternal Dimensions	200 ×107 × 135		270 × 182× 156		
Reference Ambient Temperature	°C		40		40		

Method of mounting

This series of circuit breakers is generally installed vertically but can also be installed horizontally (refer to the picture below).

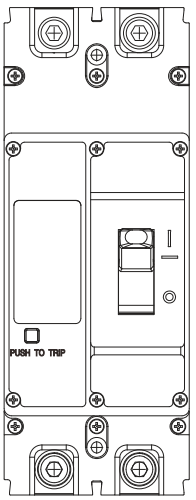

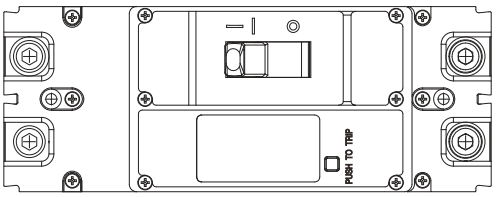

Horizontal installation

Model			DC MCCB				
Frame current			630		630V	800	
Rated current (A)	In		400A、500A、630A		400A、500A、630A	630A、700A、800A	
Rated insulation voltage (V)	Ui		1500V				
Rated impulse withstand voltage (kV)	Uimp		12kV				
Type			DC	PV	DC	DC	PV
Rated operational voltage (V)	Ue	2PExternal Dimensions	DC250V、DC500V、DC750V、DC1000V、DC1500V			DC250V、DC500V、DC750V、DC1000V、DC1500V	
		3PExternal Dimensions	DC1000V、DC1250V、DC1500V			DC1000V、DC1500V	
Rated Ultimate Short-circuit Breaking Capacity (kA)	Icu	2PExternal Dimensions	DC250V、DC500V：25 DC750V、DC1000V：15 DC1500V：10	DC250V、DC500V：50 DC750V、DC1000V：25 DC1500V：10	DC250V、DC500V：70 DC750V、DC1000V：50 DC1250V、DC1500V：20	DC250V、DC500V：25 DC750V、DC1000V：15 DC1500V：10	DC250V、DC500V：50 DC750V、DC1000V：25 DC1500V：10
		3PExternal Dimensions	DC1000V：30 DC1500V：25	DC1000V：40 DC1500V：30	——	DC1000V：30 DC1500V：25	DC1000V：40 DC1500V：30
Rated service short-circuit breaking capacity (kA)	Ics		100%Icu				
Connection Method			2POutline(Pic1) 3POutline(Pic2)		2POutline(Pic1)	2POutline(Pic1) 3POutline(Pic2)	
Isolation Function			Available				
Utilization Category	Cat.		A				
Mechanical Life	Times		20000			15000	
Electrical Life	Times		1500			800	500
Arcing Distance	mm		≥100			≥ 100	
Dimensions	mm	2PExternal Dimensions	270 × 130 × 156		275 × 106 × 178	270 × 130 × 156	
		3PExternal Dimensions	270 × 182 × 156			270 × 182 × 156	
Reference Ambient Temperature	°C		40			40	

Hold Characteristics

The circuit breaker's thermal-actuated release has a unique inverse time-delay characteristic; the electromagnetic release is instantaneous in action, and its characteristics are detailed in the table below

For power distribution

Rated Current (A)	Thermal release(ambient temperature +40℃)		Tripping current of Electromagnetic release
	Non-operation time at 1.05 times rated current (cold state) in hours	Operation time at 1.3 times rated current (hot state) in hours	
63	≥1	≤1	10In±20%
63 < In≤800	≥2	≤2	

Power losstable

Model	Current when energized(A)	Total Power Loss for Three-phase/Four-phase(W)
DKDM5DC-250	250A	40
DKDM5DC-315	315A	43
DKDM5DC-400	400A	115
DKDM5DC-400V	400A	105
DKDM5DC-630	630A	187
DKDM5DC-630V	630A	127
DKDM5DC-800	800A	262

Outline Dimensions

■ DKDM-250、 315(2P)

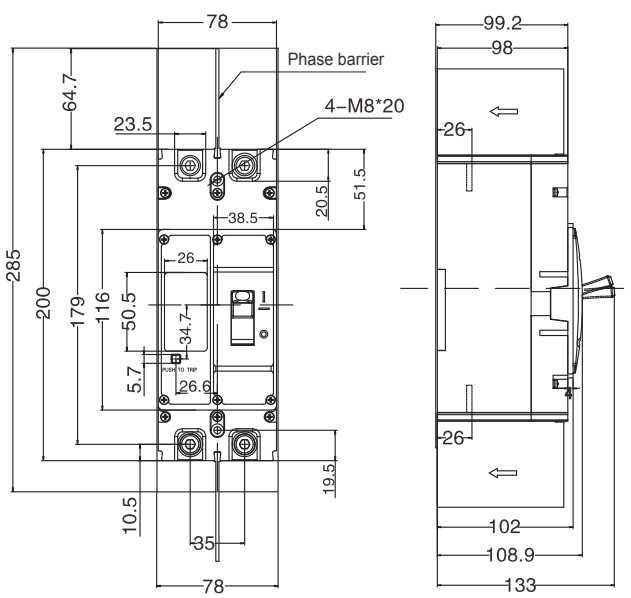

■ DKDM-250、 315(3P)

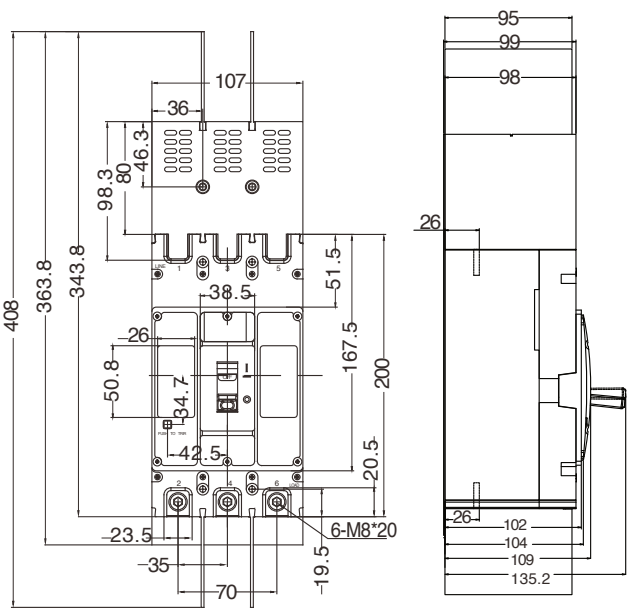

■ DKDM-400(3P)

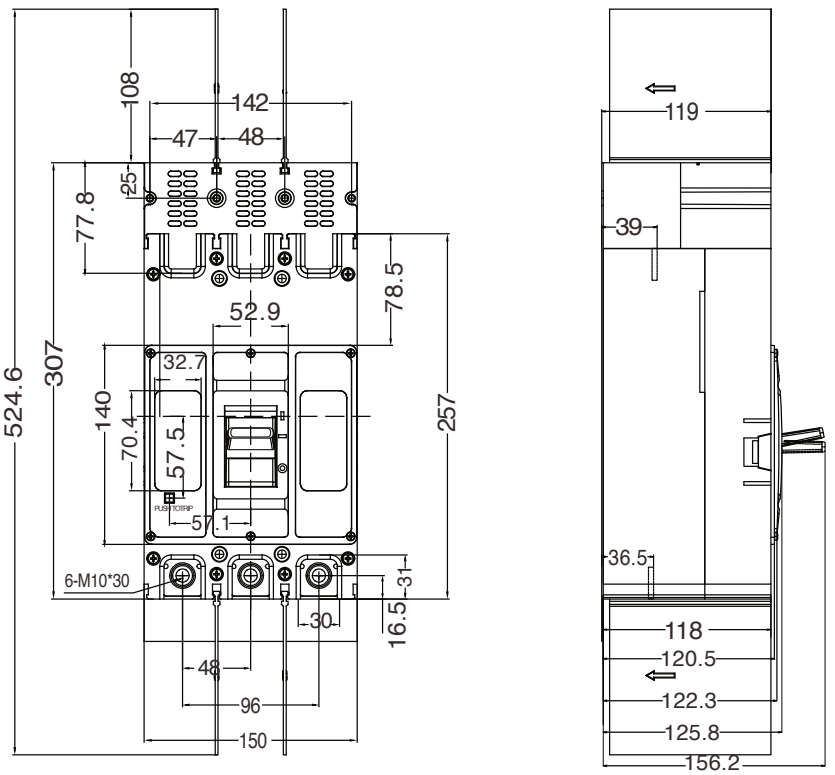

■ DKDM-630、 800(3P)

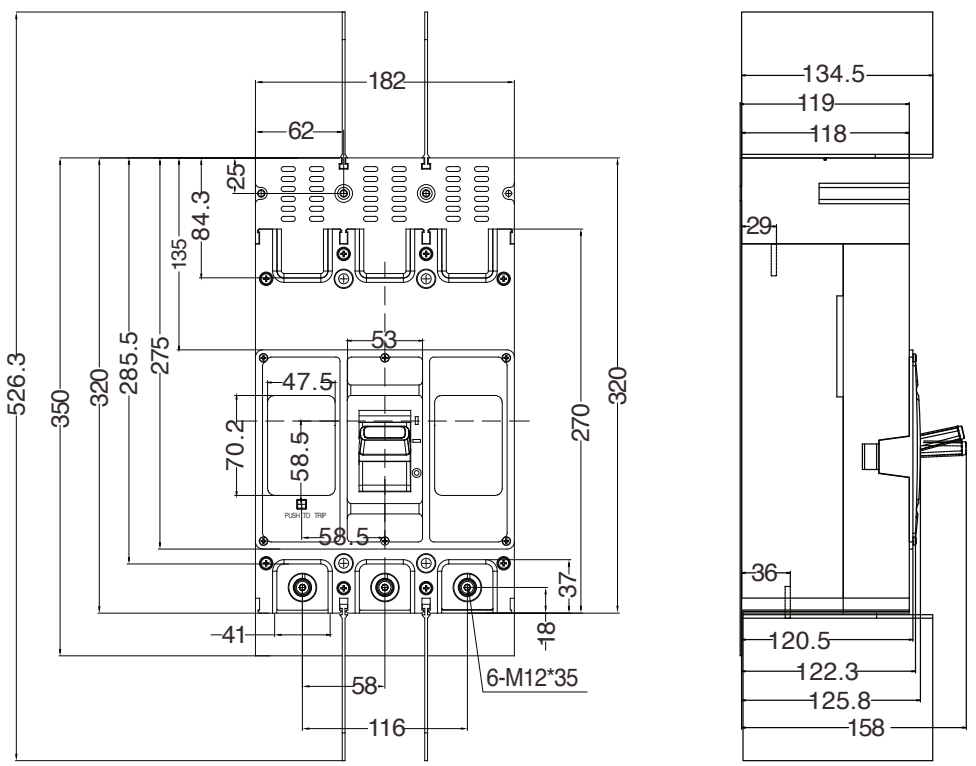

I MCCB Molded Case Circuit Breaker

Electronic MCCB



General

The DMAE series electronic molded case circuit breakers come in threeshell types that can be matched with the basic type forAC distributionprotection, with a rated working current ranging from 40A to 630A.

- It features high tripping accuracy, reliable operation and is not affected by the external environmental temperature;
- Operating environment temperature:-40°C to +70°C.

Electronic molded case circuit breaker			DMAE-250H			DMAE-400H			DMAE-630H		
Shell frame rating current Inm(A)			250			400			630		
Frequency (Hz)			50/60								
Rated current In(A)			40A、63A、80A、125A 160A、200A、250A			400			630		
Rated working voltage Ue(V)			AC230V/AC400V/AC690V								
Rated insulation voltage Ui(V)			1000								
Rated impulse withstand voltage Uimp(kV)			12								
Rated short-circuit breaking capacity code			L	M	H	L	M	H	L	M	H
Rated ultimate short -circuit breaking capacity Icu(kA)	AC400V		36	50	75	36	50	75	36	50	75
	AC690V		4	8	8	6	8	8	6	8	8
Rated operating short -circuit breaking capacity Ics(kA)	AC400V		36	50	75	36	50	75	36	50	75
	AC690V		4	8	8	6	8	8	6	8	8
Usage category			A			B					
Isolation function			√								
Arc distance (mm)			0								
Mechanical life (times)	Actual average value		20000			20000			20000		
	Standard specified value		7000			4000			4000		
Electrical life (times)	Actual average value (AC415V)		10000			8000			8000		
	Standard specified value (AC415V)		1000			1000			1000		
Trip device type			Electronic type								
Usage and methods			Distribution protection type, motor protection type, generator protection type								
Overload protection			√								
Short-circuit protection			√								
Dimensions W* L* H(mm)		1P	-			-			-		
		2P	-			-			-		
		3P	107*165*101			140*257*110			140*257*110		
		4P	142*165*101			184*257*110			184*257*110		

AC Distribution Protection

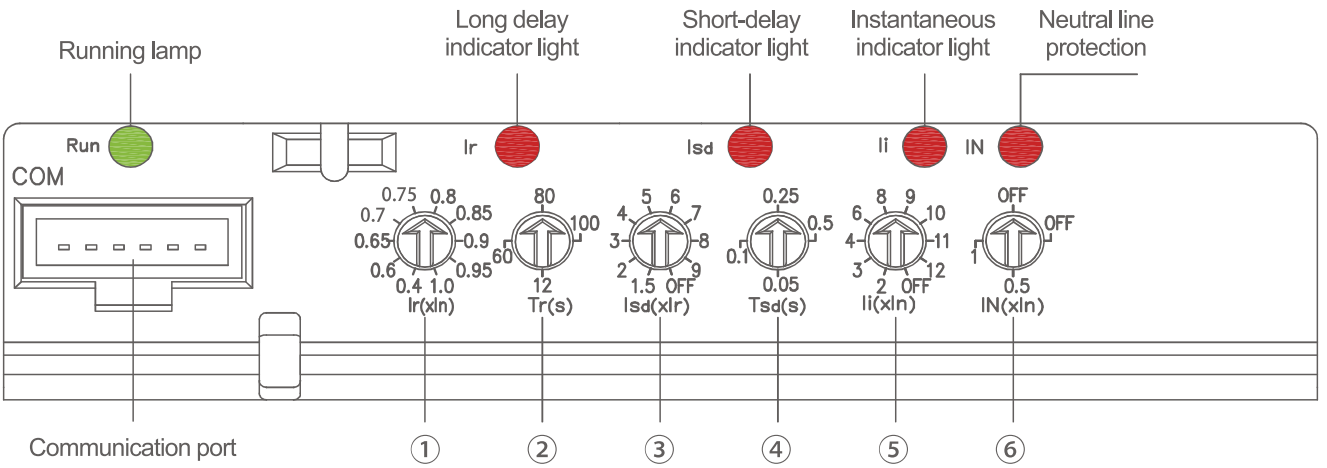

① Overload long-delay setting current (A)Ir(Factory value: 1.0In)
② Overload long delay setting time (S)Tr(Factory value :12)
③Short-circuit short-delay setting current (A)Isd(Factory value :OFF)
④Short-circuit short delay setting time (S)Tsd(Factory value :OFF)
⑤Short-circuitinstantaneous setting current (A)Ii(Factory value :12)
⑥Neutralline protection(default)(Factory value :OFF)
Grounding protection setting current (A)Ig(Optional function)(Factory value :OFF)

Electronic molded case circuit breaker	DKAE-250H	DKAE-400H	DKAE-630H
Overload protection			
Overload long-delay setting current (A)Ir	Adjustable range: (0.5~1.0) x In		
Overload long delay setting time (s)Tr	Fouradjustable Settings: 12、 60、 80、 100		
Short-circuit short-delay protection			
Short-circuit short-delay setting current (A)Isd	Adjustablerange: (1.5、 2、 3、 4、 5、 6、 7、 8、 9) x Ir+		
Short-circuit short delay setting time (s)TSd	OFF		
Short-circuit instantaneousprotection	Four adjustable Settings: 0.05、 0.1、 0.25、 0.5		
Short-circuit instantaneoussetting current (A)Ii	Adjustablerange: Ii= (2、 3、 4、 6、 8、 9、 10、 11、 12)xIn+		
Short-circuit instantaneoussetting time (s)Ti	OFF		
Neutral line protection	Built-in fixation < 0.05		
Protection current (A)	Adjustable range: (0.5、 1.0) x Ir+ OFF		
Grounding protection			
Grounding protection setting current (A)Ig	Adjustablerange: Ig= (0.1、 0.2、 0.3、 0.4、 0.5、 0.6、 0.7、 0.8、 0.9、 1)xIn+		
Grounding protection setting time (s)Tg	OFF		

Outline Dimensions

■ DMAE-250

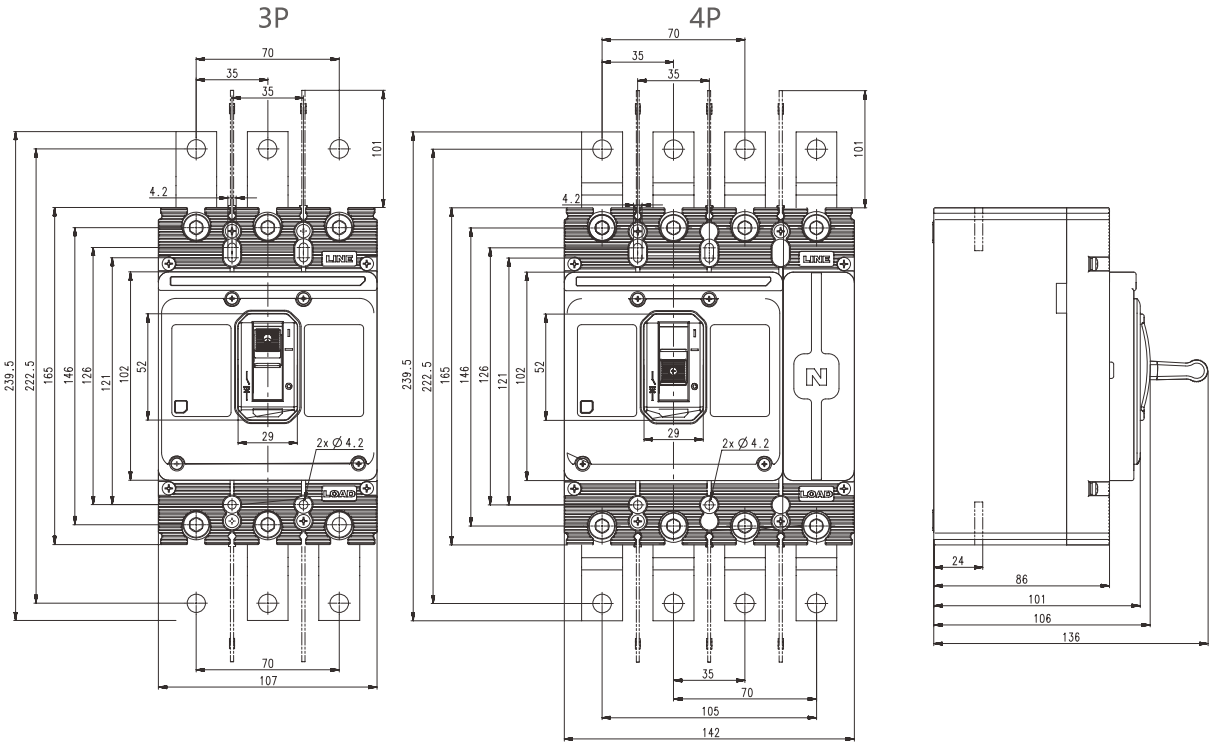

■ DMAE-400/630

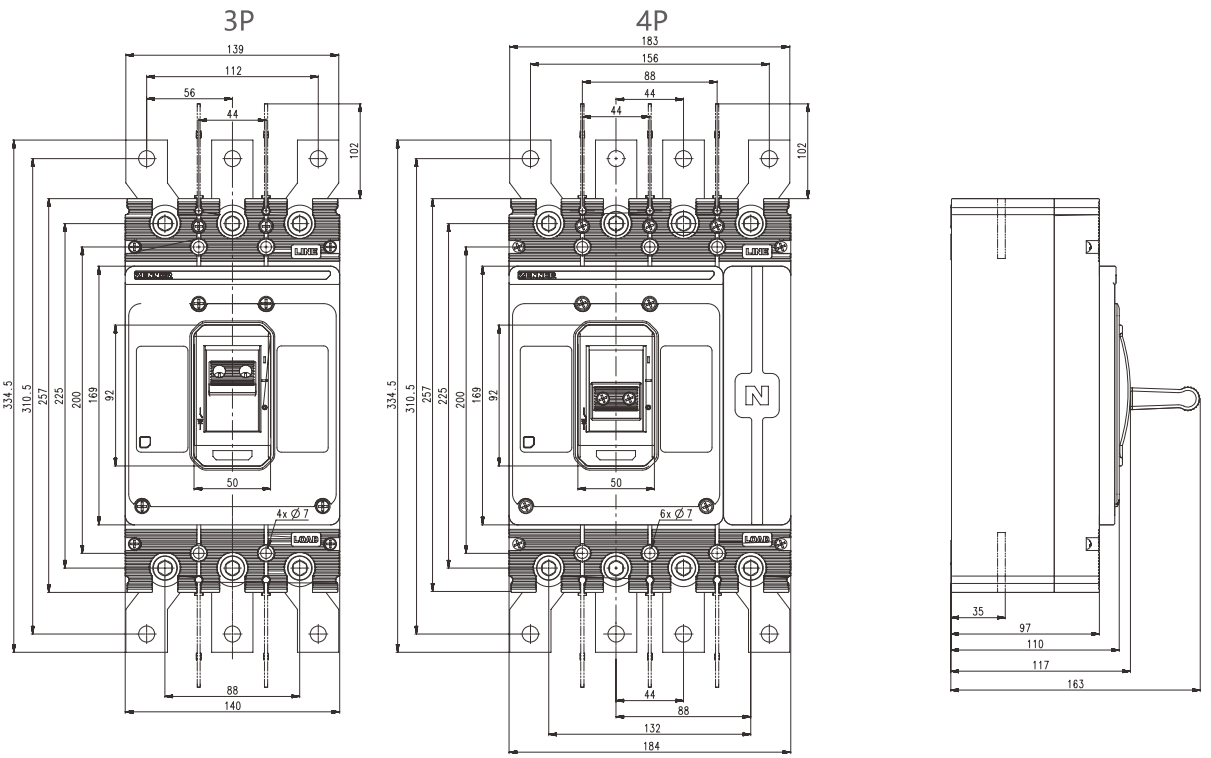

DKM6E MCCB



Circuit Breaker Voltage Ratings

- Rated operational voltage (Ue): AC 400 V/ 690 V
- Rated insulation voltage (Ui): 1000 V
- Rated impulse withstand voltage (Uimp): 8000 V

Adjustment knob

Model	DKM6E-1250	DKM6E-1600
Number of poles (P)	3, 4	3, 4
Rated ultimate short-circuit breaking capacity level	M	M
Rated ultimate short-circuit breaking capacity Icu (kA)	65	65
Rated operating short-circuit breaking capacity Ics(kA)	50	50

Environmental requirements for circuit breaker installation sites

Project	Specification
Ambient Air Temperature	-5°C~+40°C, with the 24h average value·not exceeding +35°C (at +40°C)
Relative Humidity	Average relative humidity not exceeding 50%. In the wettest month, the average minimum temperature should not exceed +25°C, and the average maximum relative humidity in that month should not exceed 90%, taking into account possible condensation on the product surface due to temperature changes.
Altitude	No more than 2000m
Pollution Level	Level 3

Insulation Test

Each circuit breaker is factory-tested for insulation in compliance with applicable standards.
However, if re-testing is required before installation, the following procedure must be observed:

- Test instrument: Use a 1000 V DC megohmmeter.
- Test conditions: With the circuit breaker in the open position, perform insulation resistance measurements as follows:
  1. Between inlet and outlet connection terminals: 1–2, 3–4, and 5–6
  2. Between terminals 1, 3, and 5 (connected by wires) and the circuit breaker casing (casing covered with metal foil)
  3. Between the undervoltage release of the main circuit and the circuit breaker casing
- Insulation resistance requirement: Not less than 20 MΩ.
- Alternative test method: If a 1000 V DC megohmmeter is not available, a power frequency withstand voltage tester may be used. Apply 3000 V AC for 1 minute across the same test points specified above.

Outline Dimensions

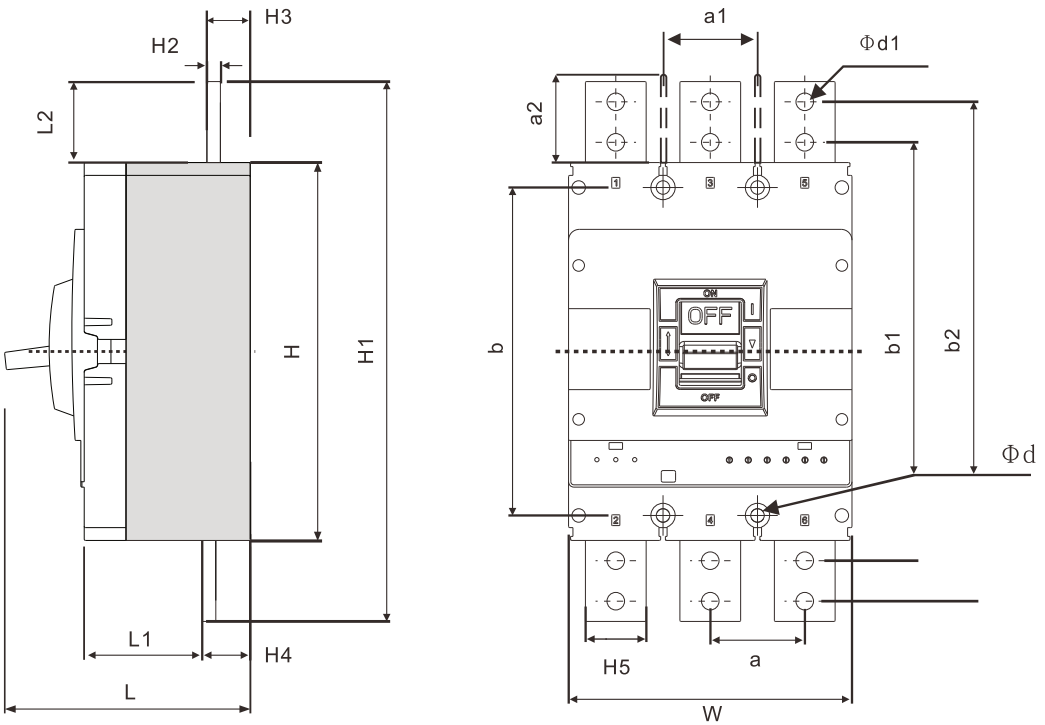

Model		Overall dimensions										Installation dimensions							
		H	H1	L2	W	L	L1	H2	H3	H4	H5	a	a1	a2	b	b1	b2	Φd	Φd1
DKM6E-1250	3	280	400	60	210	185	123	10	32.1	35.5	45	70	70	107	243	310	370	10	13
	4	280	400	60	280	195	123	10	32.1	35.5	45	70	70	107	243	310	370	10	13
DKM6E-1600	3	280	400	60	210	185	123	12	32.1	35.5	45	70	70	107	243	310	370	10	13
	4	280	400	60	280	195	123	12	32.1	35.5	45	70	70	107	243	310	370	10	13

Usage Environment

The circuit breaker must not be installed in the following environments:

- Locations containing explosive gases (risk of explosion).
- Extremely humid areas.
- Sites where the external magnetic field exceeds 5 times the Earth's magnetic field, as this may cause malfunction.
- Locations subject to vibrations greater than 5 g.
- Areas containing corrosive gases or vapors that could damage metal parts or insulation.

LASK
Ihr Elektro & Baupartner

I AC Contactor



- **More auxiliary contacts, meet various application requirements.**
- **Suitable for larger voltage fluctuation to ensure the stable operation of the equipment.**
- **Super environment adaptability, can be reliable operation with extreme environment.**

Product Overview

The DKAC and DKC1 series AC Contactors – DKAC-09, DKAC-12, DKAC-18, DKAC-25, DKAC-32, DKAC-40, DKAC-50, DKAC-65, DKAC-80, DKAC-95, DKC1-115, DKC1-150, DKC1-180, DKC1-225 – feature a modern design and compact structure. They are suitable for starting and controlling AC motors, frequent switching, and remote circuit control.

When combined with a thermal relay, these contactors can be used to assemble a magnetic motor starter.

Standards: IEC 60947-1, IEC 60947-4-1

Specifications

- Rated operational current (Ie): 9-225 A
- Rated operational voltage (Ue): 220-690 V
- Rated insulation voltage: 690 V
- Poles: 3P, 4P
- Installation: DIN rail and screw mounting

I AC Contactor

Specifications

DKACSpecifications

Appearance






Type				DKAC-09	DKAC-12	DKAC-18	DKAC-25	DKAC-32	DKAC-40	DKAC-50	DKAC-65	DKAC-80	DKAC-95
Main circuit characteristic													
Poles				3P /4P									
Rated insulation voltage(Ui)			V	690									
Rated operating voltage(Ue)			V	380/400, 660/690									
Rated thermal current(Ith), AC-1				20	20	32	40	50	50	80	80	125	125
Rated operation current(Ie)	AC-3,380/400V		A	9	12	18	25	32	38	50	65	80	95
	AC-3,660/690V		A	6.6	8.9	12	18	22	22	39	42	49	49
	AC-4,380/400V		A	3.5	5	7.7	8.5	12	14	24	28	37	44
	AC-4,660/690V		A	1.5	2	3.8	4.4	7.5	8.9	12	14	17.3	21.3
Rated operational power(Pe)	AC-3,380/400V		kW	4	5.5	7.5	11	15	18.5	22	30	37	45
	AC-3,660/690V		kW	5.5	7.5	10	15	18.5	18.5	33	37	45	45
	AC-4,380/400V		kW	1.5	2.2	3.3	4	5.4	5.5	11	15	18.5	22
	AC-4,660/690V		kW	1.1	1.5	3	3.7	5.5	6	10	11	15	18.5
Mechanical life		times		10.000.000					9.000.000		6.000.000	4.500.000	
Electrical life	AC-3			770.000				630.000				455.000	
	AC-4			160.000				130.000				100.000	
Frequency of operation	AC-3	times/ hour		1200				600					
	AC-4			300				300					
Connecting capability of main circuit terminal													
Flexible wire	1 wire		mm²	1...4			1.5...6			2.5...25		4...50	
No terminal	2 wire		mm²	1...4			1.5...6			2.5...16		4...25	
Flexible wire	1 wire		mm²	1...4			1...6			2.5...25		4...50	
With terminals	2 wire		mm²	1...2.5			1...4			2.5...10		4...16	
Hard wire	1 wire		mm²	1...4			1.5...6	1.5...10		2.5...25		4...50	
No terminal	2 wire		mm²	1...4			1.5...			2.5...10		4...25	
Fastening torque			N·m	1.2			1.8			5		9	
Coil													
Rated control voltage(Us)	50Hz		V	AC24、36、48、110、127、220/230、240、380/400、415、440									
	50/60Hz		V	AC24、36、48、110、127、220/230、240、380/400、415、440									
Allowed control circuit voltage(Us)	Operation		V	Installation inclination angle ±22.5°: 85%~110%Us; Installation inclination angle±5°: 70%~120%									
	Release		V	Installation inclination angle ±22.5°: 20%~75%Us; Installation inclination angle±5°: 20%~65%									
Power consumption of coil	Actuation		VA	60			70			200		200	
	Keep		VA	6-9.5			6-9.5			15-20		15-20	
	Consumption		W	1-3			1-3			6-10		6-10	
Auxiliary contacts													
Auxiliary contacts specification			A	11									
Rated thermal current (Ith)			A	10									
Rated operating voltage (Ue)	AC		V	380									
	DC		V	220									
Rated control capacit	AC-15		VA	360									
	DC-13		W	33									
Certification				CE, TUV, CB									

Technical Data

Type	Operating and Installation Conditions
Installation category	III
Pollution level	3
Certification	CE, CB, CCC, TUV
Protection degree	DKAC-09~40 do IP20;DKAC-50~95 do IP10
Ambient temperature	limit of temperature: -35°C~+70°C,normal temperature: -5°C~+40°C, The average no more than +35°Cwithin 24 hours. If not in normal operating temperature range, please refer to "Instructions for abnormal environment"
Altitude	≤2000m
Ambient temperature	The maximum temperature of 70 degrees, the air relative humidity not exceed 50%, under lower temperature can allow for higher relative humidity. If the temperature is 20°C, the air relative humidity could up to 90%, Special measures should be taken for occasional condensation due to humidity changes.
Installation position	Inclination between installation surface and vertical surface should not exceed ±5°
Shock vibration	Products should be installed and used without significant shake, shock and vibration place.

Overall And Mounting

■ DKAC-09~40

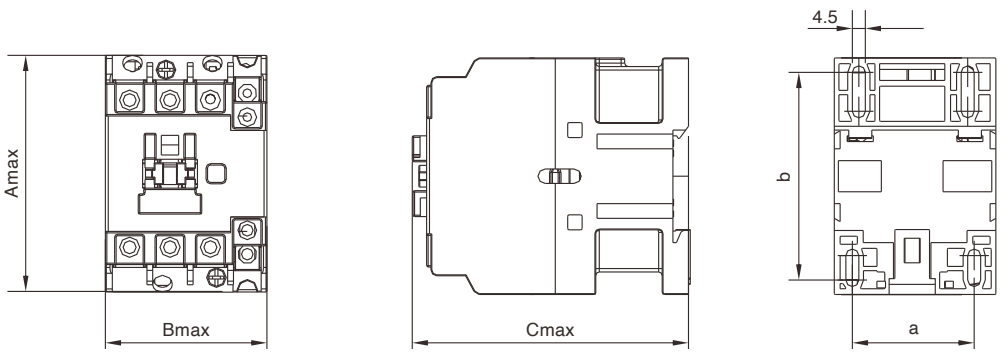

■ DKAC-50~95

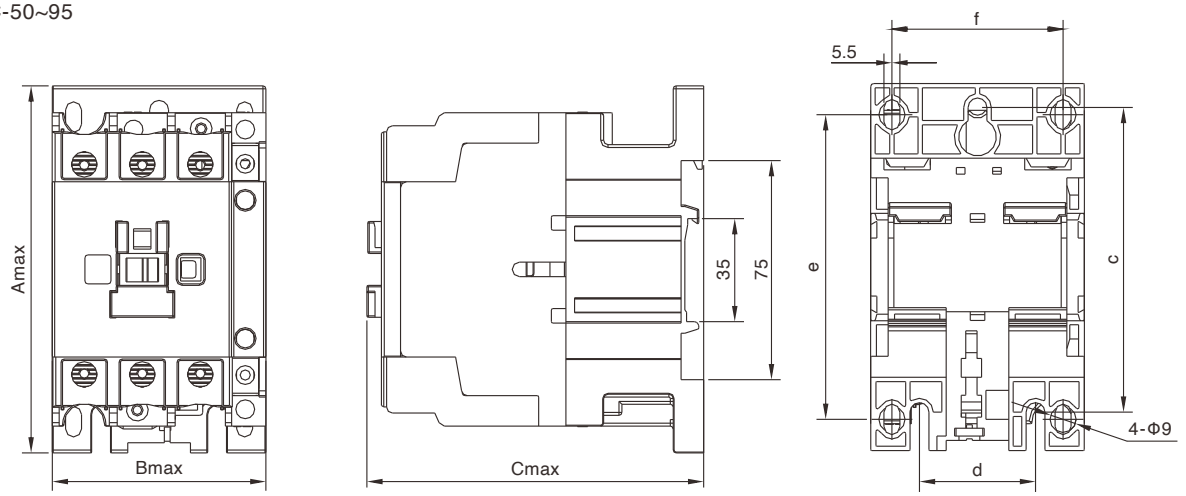

Type	Amax	Bmax	Cmax	a	b	c	d	e	f
DKAC-09, 12, 18	74.5	45.5	85.5	35	50/60	-	-	-	-
DKAC-25, 32, 40	83	56.5	97	40	50/70	-	-	-	-
DKAC-50, 65	127.5	74.5	117	-	-	105	40	100/110	59
DKAC-80, 95	127.5	85.5	125.5	-	-	105	40	100/110	67

I AC Contactor

■ DKAC-09~40 4P

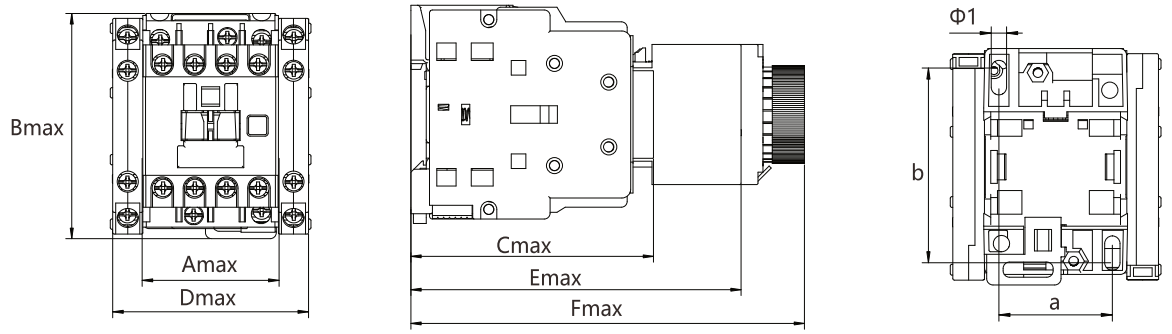

■ DKAC-50~95 4P

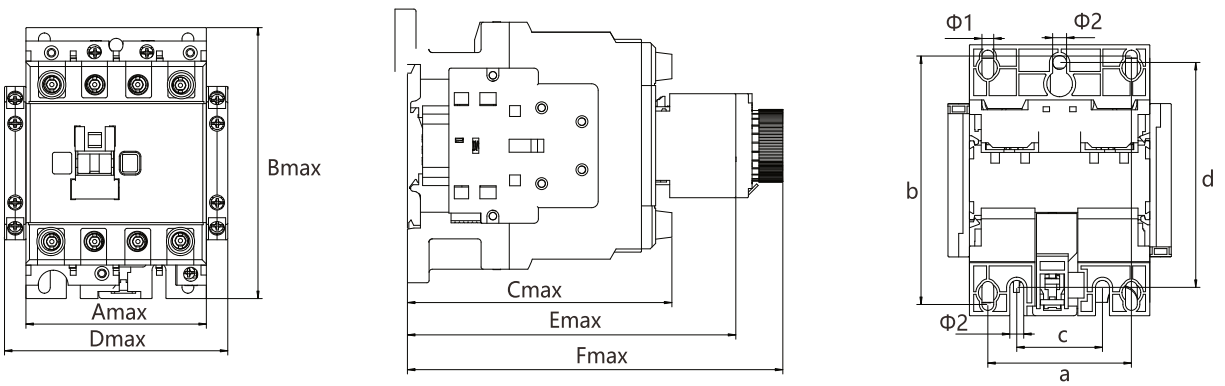

Type		Amax	Bmax	Cmax	Dmax	Emax	Fmax	a	b	c	d	Φ1	Φ2
DKAC-09, 12, 18(4P)		47	76	84	67	115	136	34/36	48.5/61.5	-	-	4.8	-
DKAC-25, 32, 38, 40(4P)		58	83	96	77	127	149	39/40	70	-	-	5	-
DKAC-50, 65(4P)	04	86	128	122	106	153	175	67	116	40	105	5.5	6.5
	08			124									
DKAC-80, 95(4P)	04	98	129	127	118	158	179	68	115	40.5	107.5	5.5	6.5
	08			137									

AC Contactor Auxiliary Blocks

Picture	Description
	AC-3Ac ContactorAuxiliaryBlocks(1NO+ 1NC)
	AC-3Ac ContactorSideAuxillaryBlocks (2NO+ 2NC)

AC Contactors For Capacitor Banks

Picture	Poles	Description
	3P	18A 7.5KVAR
	3P	25A 12KVAR
	3P	32A 18KVAR
	3P	43A 20KVAR
	3P	50A 25KVAR
	3P	65A 30KVAR
	3P	80A 40KVAR
	3P	95A 50KVAR

Specifications

UNACSpecifications

Appearance





Type	Rated operational currentin AC-3(A)	Max power ratings of 3-phase motors incategory AC-3(kW)							Operating frequency (time/hour)AC-3	Electrical life AC-3*10⁴	Mech anical life*10⁴
		220V 230V	380V 400V	415V	400V	500V	660V 690V	1000V			
DKAC-F115	115	30	55	59	59	75	80	62	1200	120	1000
DKAC-F150	150	40	75	80	80	90	100	62	1200	120	1000
DKAC-F185	185	55	90	100	100	110	110	100	600	100	600
DKAC-F225	225	63	110	110	110	130	129	100	600	100	600
DKAC-F265	265	75	132	140	140	160	160	147	600	80	600
DKAC-F330	330	100	160	180	180	220	220	160	600	80	600
DKAC-F400	400	110	200	220	220	257	280	185	600	80	600
DKAC-F500	500	147	250	280	280	355	335	335	600	80	600
DKAC-F630	630	200	335	375	375	400	450	450	600	80	600
DKAC-F780	780	220	400	425	425	450	475	450	600	80	600
DKAC-F800	800	250	450	450	450	450	470	450	600	80	600

Overall And Mounting

■ DKAC-F115~F330

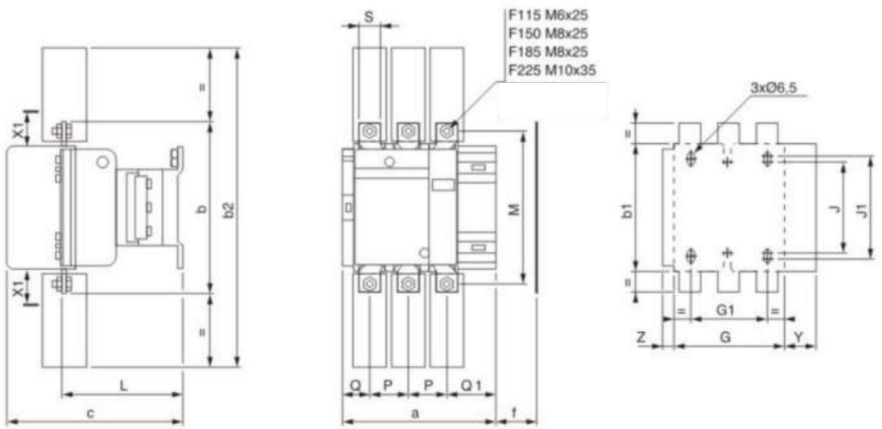

Type		a	b	b1	b2	c	f	G	G1	J	J1	L	M	P	Q	Q1	S	1	Y	Z
DKAC-F115	3P	163.5	162	137	265	171	131	106	80	106	120	107	147	37	29.5	60	20	26	44	13.5
	4P	200.5	162	137	265	171	131	143	80	106	120	107	147	37	29.5	60	20	26	44	13.5
DKAC-F150	3P	163.5	170	137	301	171	131	106	80	106	120	107	150	40	26	57.5	20	34	44	13.5
	4P	200.5	170	137	301	171	131	143	80	106	120	107	150	40	26	55.5	20	34	44	13.5
DKAC-F185	3P	168.5	174	137	305	181	130	111	80	106	120	113.5	154	40	29	59.5	20	34	44	13.5
	4P	208.5	174	137	305	181	130	151	80	106	120	113.5	154	40	29	59.5	20	34	44	13.5
DKAC-F225	3P	168.5	197	137	364	181	130	111	80	106	120	113.5	172	48	21	51.5	25	44.5	44	13.5
	4P	208.5	197	137	364	181	130	151	80	106	120	113.5	172	48	17	47.5	25	44.5	44	13.5
DKAC-F265	3P	201.5	203	145	375	213	147	142	96	106	120	141	178	48	39	66.5	25	44.5	38	21.5
	4P	244.5	203	145	375	213	147	190	96	106	120	141	178	48	34	66.5	25	44.5	38	21.5
DKAC-F330	3P	213	206	145	375	213	147	154.5	96	106	120	145	181	48	43	74	25	44.5	38	20.5
	4P	261	206	145	375	213	147	202.5	96	106	120	145	181	48	43	74	25	44.5	38	20.5

DKAC-F400~F500

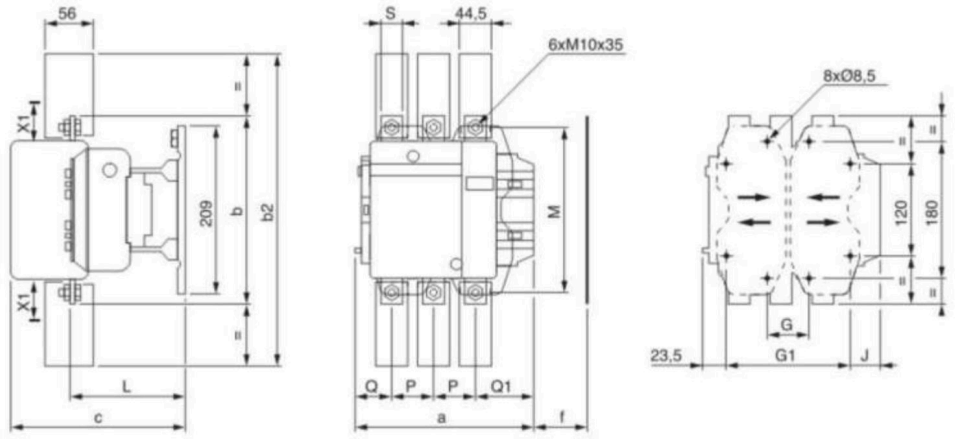

Type		a	b	b2	c	f	G*	G min	G max	G1*	G1 min	G1 max	J	L	M	P	Q	Q1	S
DKAC-F400	2P	213	206	375	219	119	80	66	102	170	156	192	19.5	145	181	48	69	96	25
	3P	213	206	375	219	119	80	66	102	170	156	192	19.5	145	181	48	43	74	25
	4P	213	206	375	219	119	80	66	150	170	156	240	67.5	145	181	48	43	74	25
DKAC-F500	2P	233	238	400	232	141	80	66	120	170	156	210	39.5	145	208	55	76	102	30
	3P	233	238	400	232	141	80	66	120	170	156	210	39.5	146	208	55	46	77	30
	4P	233	238	400	232	141	140	66	175	230	156	265	34.5	146	208	55	46	77	30

DKAC-F630~F800

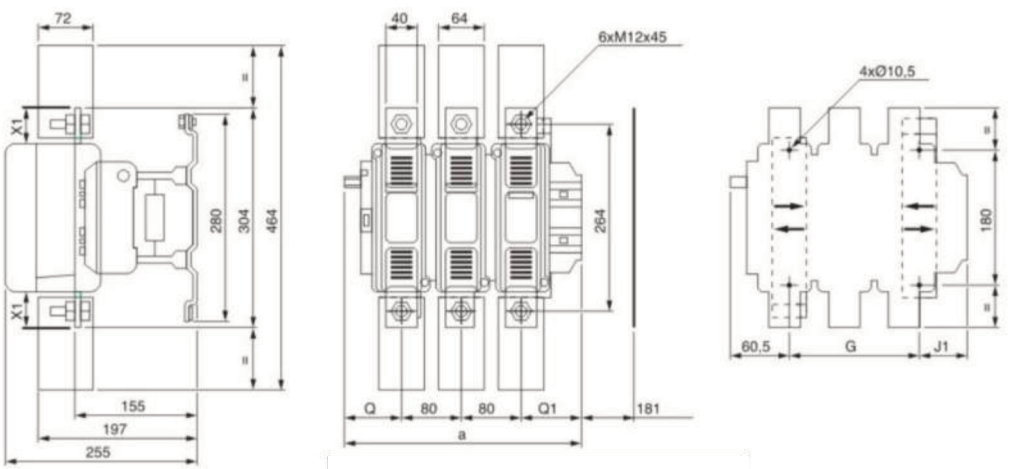

Type		a	G	G min	G max	J1	Q	Q1
DKAC-F630	2P	309	180	100	195	68.5	102	127
DKAC-F630,F800	3P	309	180	100	195	68.5	60	89
DKAC-F630	4P	389	240	150	275	68.5	60	89



Product Overview

The DKAC-M series AC Contactor features a modern design and compact structure, making it suitable for frequent starting and stopping of AC motors, as well as remote switching of circuits over long distances. When combined with a thermal overload relay, it forms a complete magnetic motor starter system.

Standards: IEC 60947-1, IEC 60947-4-1

Model and Meaning

DKAC- M □□ □□ -/□

- Z = DC operation, N = Reversible AC contactor
- Contact types and quantities are indicated by numbers (reversible contactors refer to the contact configuration of a single unit):
  - 10 → Three normally open (NO) main contacts + one NO auxiliary contact
  - 01 → Three NO main contacts + one normally closed (NC) auxiliary contact
  - 08 → Two NO main contacts + two NC main contacts
  - 40 → Four NO main contacts
- Rated current: Expressed as the rated operational current under AC-3 utilization category at 400V (380V) (6A, 9A, 12A, 16A)
- Design serial number

Specifications

- Rated operational current (Ie): 6–16 A
- Rated operational voltage (Ue): 220–690 V
- Rated insulation voltage (Ui): 690 V
- Poles: 3P / 4P
- Mounting: DIN rail and screw installation
- Application: Motor starting, stopping, and remote control of AC circuits

Specifications

Specifications						
Appearance						
Type			DKAC-M06	DKAC-M09	DKAC-M12	DKAC-M16
Main circuit characteristic						
Poles			3P/4P			
Rated insulation voltage(Ui)		V	690			
Rated operating voltage(Ue)		V	380/400, 660/690			
Rated thermal current(Ith), AC-1			20			
Rated operation current(Ie)	AC-3,380/400V	A	6	9	12	16
	AC-3,660/690V	A	3.8	4.9	4.9	4.9
	AC-4,380/400V	A	6	9	9	12
	AC-4,660/690V	A	3.8	4.9	4.9	4.9
Rated operational power(Pe)	AC-3,380/400V	kW	2.2	4	5.5	7.5
	AC-3,660/690V	kW	3	4	4	4
Mechanical life		10000 times	1200			
Electrical life	AC-3		120			
	AC-4		See electrical life curve			
Frequency of operation	AC-3	times/ hour	1200			
	AC-4		300			
Connecting capability of main circuit terminal						
Flexible wire	1 wire	mm²	1...4			
No terminal	2 wire	mm²	1...4			
Flexible wire	1 wire	mm²	1...4			
With terminals	2 wire	mm²	1...2.5			
Hard wire	1 wire	mm²	1...4			
No terminal	2 wire	mm²	1...4			
Fastening torque		N·m	1.2			
Coil						
Rated control voltage(Us)	50Hz	V	24、 36、 48、 110、 127、 220、 380、 415			
	50/60Hz	V	24、 36、 48、 110、 127、 220、 380、 415			
	DC	V	12、 24、 36、 48、 110、 127、 220			
Allowed control circuit voltage(Us)	Operation	V	Installation inclination angle ±22.5°: 85%~110%Us； Installation inclination angle±5°: 70%~120%			
	Release(AC)	V	Installation inclination angle ±22.5°: 20%~75%Us； Installation inclination angle±5°: 20%~60%			
	Release(DC)	V	Installation inclination angle ±22.5°: 10%~75%Us； Installation inclination angle±5°: 10%~60%			
Power consumption of coil	Actuation	VA	20-40			
	Keep	VA	9.5			
	Consumption	W	1-3			
Auxiliary contacts						
Auxiliary contacts specification		A	1NO/1NC			
Rated thermal current (Ith)		A	10			
Rated operating voltage (Ue)	AC	V	380/400			
	DC	V	220			
Rated control capacit	AC-15	VA	Ue/Ie: AC380V/400V/1.5A Ith: 10A			
	DC-13	W	Ue/Ie: DC220V/0.3A			
Certification			CE, TUV, CB			

Operating and Installation Conditions

Type	Operating and Installation Conditions
Installation category	III
Pollution level	3
Certification	CE, CB, TUV
Protection degree	Ip20
Ambient temperature	limit of temperature: -35°C~+70°C, normal temperature: -5°C~+40°C, The average no more than +35°C within 24 hours. If not in normal operating temperature range, please refer to "Instructions for abnormal environment"
Altitude	≤2000m
Ambient temperature	The maximum temperature of 70 degrees, the air relative humidity not exceed 50%, under lower temperature can allow for higher relative humidity. If the temperature is 20°C, the air relative humidity could up to 90%, Special measures should be taken for occasional condensation due to humidity changes.
Installation position	Inclination between installation surface and vertical surface should not exceed ±5°
Shock vibration	Products should be installed and used without significant shake, shock and vibration place.

Overall and Mounting

Installation and overall dimensions of DKAC-M06~M16 series AC contactor

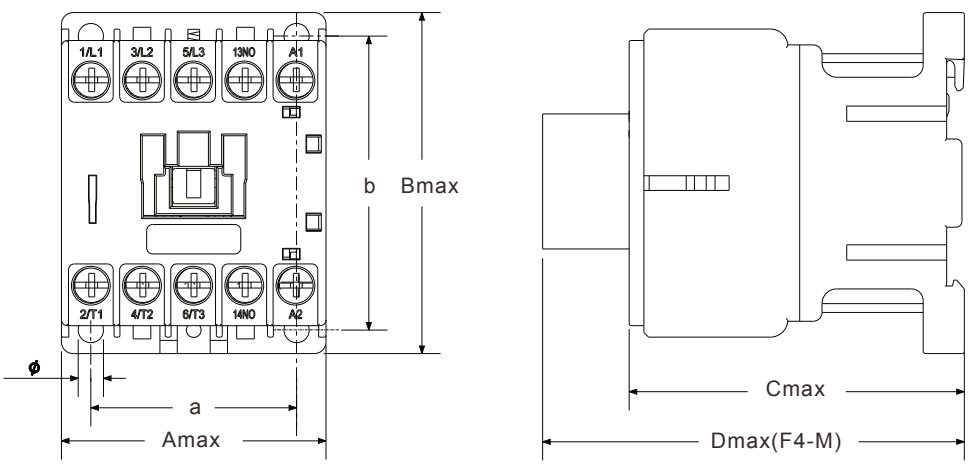

Type	Amax	Bmax	Cmax	Dmax	a	b	Φ
DKAC-M06-M16	45.5	59	58	94	35±0.35	50±0.48	4.2
DKAC-M06/Z-M16/Z	45.5	59	70	106	35±0.35	50±0.48	4.2

Installation and overall dimensions of DKAC-M06/N~M16/N series AC contactor

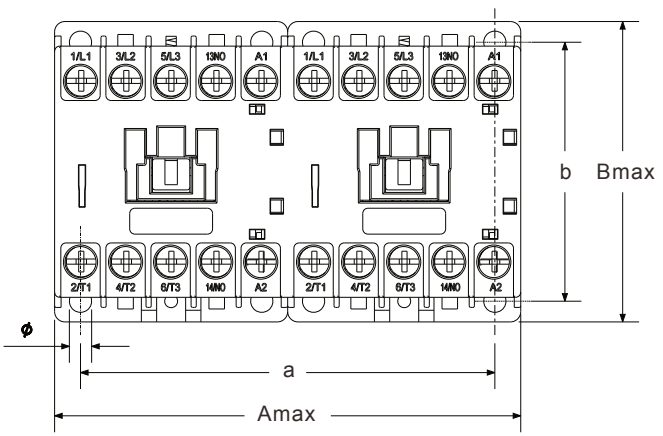

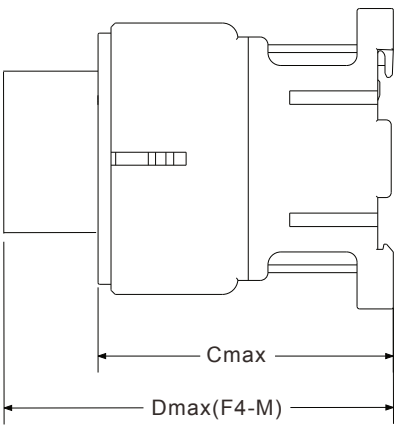

Type	Amax	Bmax	Cmax	Dmax	a	b	Φ
DKAC-M06/N-M16/N	91	59	58	94	80± 0.35	50± 0.48	4.2
DKAC-M06/Z/N-M16/Z/N	91	59	70	106	35± 0.35	50± 0.48	4.2

F4-M Auxiliary contact group

Type	Product	Configuration of contacts	
		Number of N/O contact	Number of N/C contact
F4-M20 F4-M11 F4-M02		2 1 0	0 1 2
F4-M40 F4-M31 F4-M22 F4-M13 F4-M04		4 3 2 1 0	0 1 2 3 4

FS-M Surge suppression module

Model of Surge Suppression Module	Product	Control Voltage
FS-M		AC/DC:24V-48V AC/DC:110V-240V AC/DC:380V-440V

I AC Contactor

Derived Products When The Contactor is Assembled With Following Accessory Module

Derived products	Contactor	Accessorial modular	Picture
Reversing contactor	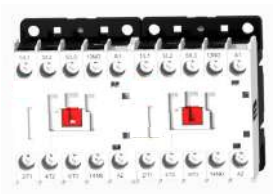		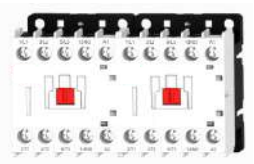
Auxiliary Contact			
Dust cover			
Electromagnetic Starter			

DKAC-M AC Contactor Coil voltage specification table								
AC(V) 50Hz	24	36	48	110	127	220	380	415
AC(V) 60Hz	24	36	48	110	127	220	380	415
AC(V) 50/60Hz	24	36	48	110	127	220	380	415
DC(V)	12	24	36	48	110	127	220	-

Instructions for use of correction factors in high altitude areas			
Altitude (m)	2000	3000	4000
Rated impulse withstand voltage correction factor	1	0.88	0.78
Rated operation current correction factor	1	0.92	0.90

Instructions for use under abnormal ambient temperature				
Ambient temperature (℃)	55	60	65	70
Correction factor	1	0.93	0.875	0.75

DKAC-M AC Contactor selection table

Motor power kW		Maximum operation current A	Number of contactscontained in thecontactor body		Contactor model
380V/400V	660V/690V	(AC-3 380V/400V)	NO	NC	
2.2	3	6	1	0	DKAC-M0610
2.2	3	6	0	1	DKAC-M0601
2.2	3	6	0	0	DKAC-M0604
2.2	3	6	0	0	DKAC-M0608
4	4	9	1	0	DKAC-M0910
4	4	9	0	1	DKAC-M0901
4	4	9	0	0	DKAC-M0904
4	4	9	0	0	DKAC-M0908
5.5	4	12	1	0	DKAC-M1210
5.5	4	12	0	1	DKAC-M1201
5.5	4	12	0	0	DKAC-M1204
5.5	4	12	0	0	DKAC-M1208
7.5	4	16	1	0	DKAC-M1610
7.5	4	16	0	1	DKAC-M1601
7.5	4	16	0	0	DKAC-M1604
7.5	4	16	0	0	DKAC-M1608

Modular Contactors

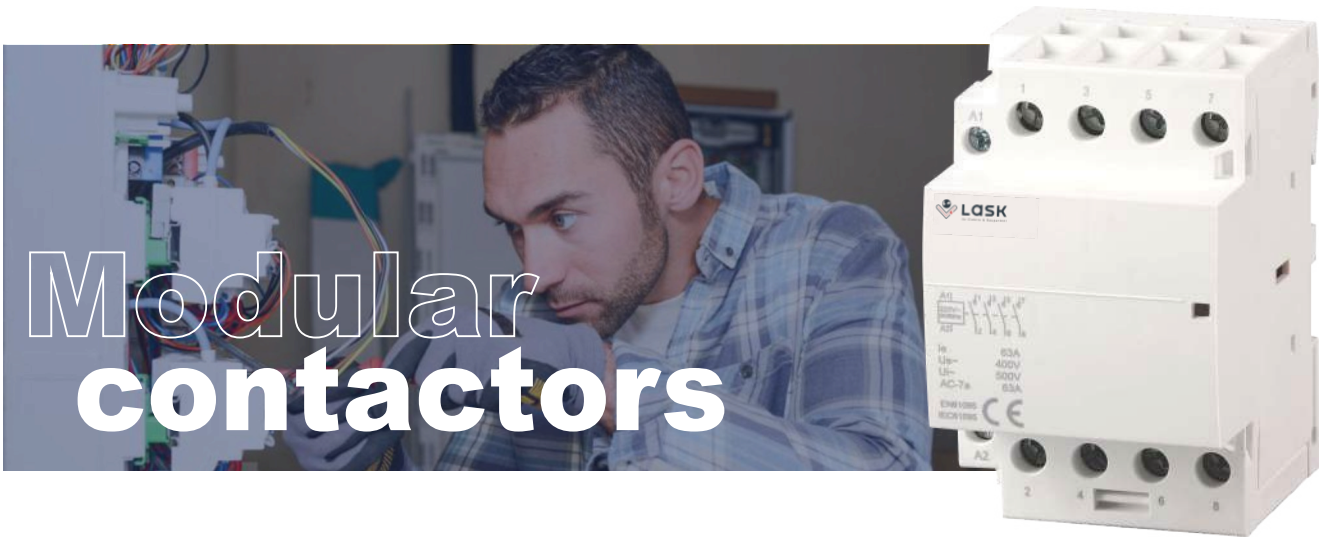

The breadth of the ICT modular contactor range satisfies most application requirements. These modular contactors can be combined with auxiliary control, protection, and indication functions.
The range covers 1P, 2P, 3P, and 4P types, with rated operational currents from 16 A up to 100 A, providing reliable performance under both AC7a (resistive load) and AC7b (inductive load) conditions.

Contactors

Modular contactors can be used to remote control applications in alternative networks:
lighting, heating, ventilation, roller blinds. sanitary hot water mechanical ventilation systems,etc load-shedding of non-priority circuits

Contactors Auxiliaries

Indication O+F
This auxiliary allows indication or control of the open "or"closed"postition of the contactor power contacts



Dual control BACTc

Used to control a contactor in impulse-type mode or to combine latched or impulse-type control orders

Indication BACTs

This auxiliary allows indication or control of the "open"or"closed" position of the contactor power contacts

Choice of 50 Hz contactors							
Type		Contactor					
Rating	A	16	20	25	40	63	100
Auxiliaries							
O+F indication auxiliary		Yes					

Technical Data

Power circuit		
Voltage rating(Ue)	1P,2P	250V AC
	3P,4P	400VAC
Frequency		50Hz or 60Hz
Endurance(O-C)		
Electrical		100,000 cycles
Maximum number of switching operation a day		100
Insulation voltage		500 V AC
Pollution degree		2
Rated impulse withstand voltage(Uimp)		2.5kV(4 kV for 12124/48V AC)
Degree of protection(IEC 60529)	Device only	IP20
	Device in modular enclosure	IP40
Operating temperature		-5°C to +60°C(1)
Storage temperature		-40°C to +70°C
Tropicalization(IEC 60068-1)		Treatment 2(relative humidity 95% at 55°C)
ELSVcompliance(Extra Low Safety Voltage)for 12/24/48vac versions The product control conforms to the SELV(safetyextralow voltage)requirements		

(1)In the case of contactor mounting in an enclosure for which the interior temperature is in the range between 50°C and 60°C, it is necessary to use a spacer, between each contactor.

Dimensions

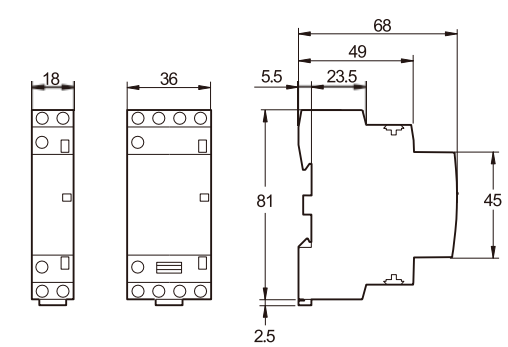

16/25A

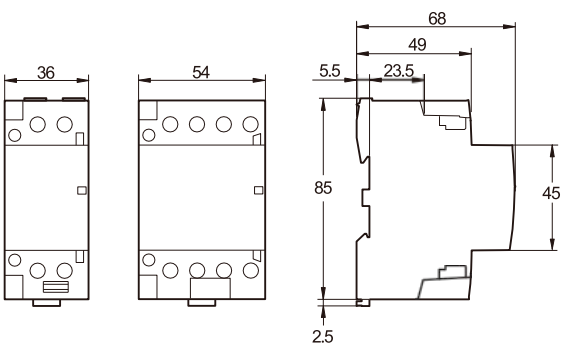

40/63A

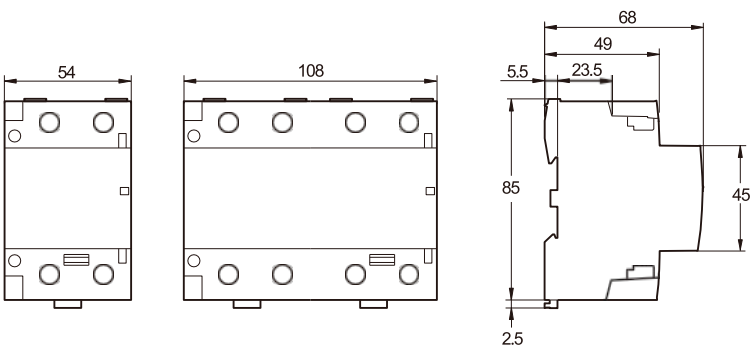

100A



Air Circuit Breaker

General

The DKDW1 Series Intelligent Air Circuit Breaker (hereinafter referred to as circuit breaker) is designed for distribution networks with AC 50 Hz, rated working voltages of 400 V and 690 V, and rated currents up to 6300 A. It is used to distribute electrical energy and to protect lines and equipment against overload, undervoltage, short circuit, grounding, and other faults.

The circuit breaker is equipped with an intelligent controller featuring precise selective protection and multifunctional capabilities, ensuring comprehensive protection across electrical systems. It is particularly suitable for distribution networks where improved power supply reliability and prevention of unnecessary outages are required. Among them, the 2H and 3H intelligent controllers feature communication interfaces that allow easy connection with field bus systems.

They support four remote functions: telemetry, remote regulation, remote communication, and control, meeting the requirements of modern control automation.

Leakage protection can be achieved by configuring a leakage current transformer together with the intelligent controller.

The circuit breaker with rated currents up to 1000 A can also be used for overload, short circuit, undervoltage, and ground fault protection of motors in AC 50 Hz and 400 V networks, and is suitable for infrequent motor starting under normal conditions.

The DKDW1 Series is available in fixed type and withdrawable (drawable) type versions, offering flexibility for different installation and maintenance requirements.

The Circuit Breaker Meets the Following Standards

- IEC60947-1 General principles for low-voltage switchgear and controlgear.
- IEC60947-2 Low-voltage switchgear and controlgear, low-voltage circuit breakers.
- IEC60947-4-1 Low-voltage switchgear and controlgear, electromechanical contactors and motor starters.
- Overview and guidelines for environmental testing of electrical and electronic products.
- Climatic and environmental conditions for electrical products at different altitudes.

Installation Environment Requirements

Project	Standard
Ambient Temperature	–5℃ to + 40℃, the 24hour average value does not exceed + 35℃, and the ambient temperature is not greater than + 40℃. The capacity reduction coefficient should refer to the manual
Relative Humidity	When the maximum temperature is + 50℃, the relative humidity of air is not more than 50%. Higher relative humidity can be allowed at lower temperature, for example, 90% relative humidity can be allowed at 20℃
Altitude	≤2000m,Refer to the specification for derating factor exceeding 2000m
Installation Requirements	Vertical inclination of circuit breaker installation≤5°
Class Of Pollution	Ⅲ
Use Category	Intelligent universal circuit breaker: B
Protection Level	The circuit breaker is installed in the cabinet room with a door frame, and the protection grade reaches Ip40

Technical Parameters

Model			DKDW1			
Frame current rating Inm(A)			2000	3200	4000	6300
Rated working current In (A)			(400)630,800,1000 1200,1600,2000	2000,2500,2900 3200,4000	3200,3600 3900,4000	4000,5000 6300
Rated working voltage Ue (V)			AC50Hz 400V/690V		AC50Hz 400V/690V	
Rated insulation voltage Ui(V)			1000		1000	
Rated impulse withstand voltage Uimp (kV)			12		12	
Power frequency withstand voltage U(V)1min			AC2500V 50Hz		AC2500V 50Hz	
Pole number			3P/4P		3P/4P	
Rated limit short circuit breaking capacity (effective value)Icu(KA)		400V	100	100	138	138
		690V	65	65	105	105
Rated short circuit breaking capacity (effective value)Ics(KA)		400V	65	85	138	138
		690V	65	65	105	105
Rated short time withstand current (1s)(RMS)Icw(KA)		400V	65	85	138	138
		690V	65	65	105	105
Total breaking time (without additional delay)(ms)			12~18		12~18	
Closing time(ms)			≤60		≤60	
Operational performance	Electrical life (times)		1000	500	2500	200
	Mechanical life (times)	Maintenance free	2500		2500	2000
		With maintenance	10000		10000	8000

Toroidal Current Transformer



The DTT series toroidal transformers allow the sense of leaking currents to earth, These transformers have been desiened to be coupled to the DELRseries earth leakage current relays.

Main Features

- Measure of detecting Earth Leakge Currents single phase, three phase with or without neutral applications;
- Hole diameters: Φ40 mm ; Φ80 mm ; Φ120 mm ; Φ160 mm; Φ210 mm;
- Surface mounting with fixing slots;
- Plug-in mounting for secondary terminals;
- Fire Retardant insulated plastic Housing.

Technical Data

Toroidal Current Transformer	
CBCT Type	Closed Toroid
Turns Ratio	200/1A
System Voltage	720V maximum
System Frequency	50 Hz or 60 Hz
Insulation Voltage	3kV for 1 minute
Distance Between CBCT and DELR	<1 meters
Operating Temperature	0°C to +55°C
Storage Temperature	-25°C to +55°C
Humidty	Up to 95% RH

Dimensions

Toroidal Current Transformer

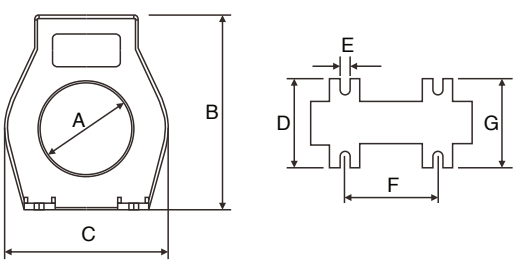

	CT-40	CT-80	CT-120	CT-160	CT-210
A	41	81	121	161	211
B	88	133	172.5	212.5	262.5
C	74	120	158	188	248
D	40	40	40	40	40
E	4.3	4.3	4.3	4.3	4.3
F	42	85	110	146	186
G	40	40	40	40	40

Wiring

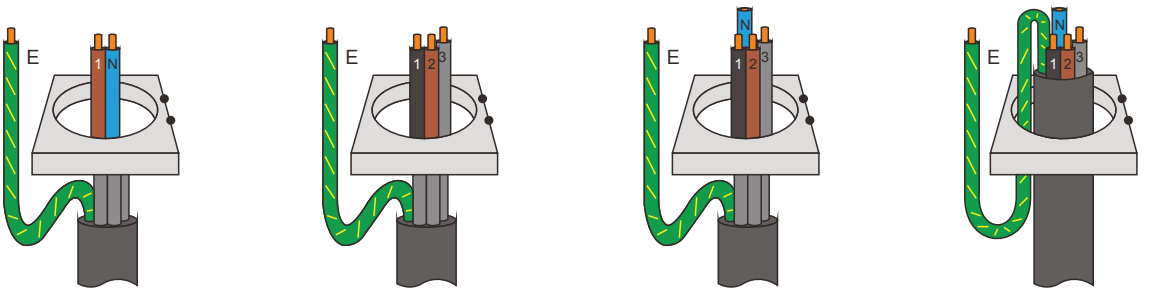

single-phase

3 phases
without neutral

3 phases
with neutral

3 phases
with neutral

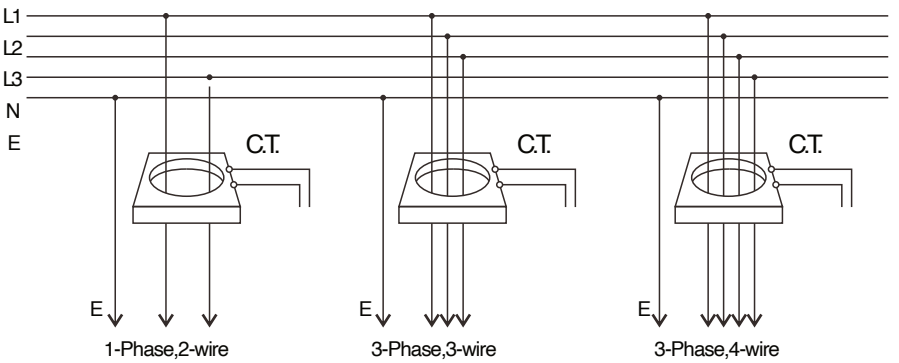

Earth Leakage Relay



Main Features

- 25 selectable sensitivity settings: 30 mA to 30 A
- 9 selectable time delays: 0 ms to 3s
- Earth leakage level indicators
- Detection of no connection to CT
- Relay tripped indicator
- Trip starting indicator
- Protected against nuisance tripping

Features for ELR only*

- 50% pre-fault output contact
- Remote test and remote reset functions

Features for ELR only***

- UKM32Z with the use of
- Remote test and remote reset functions

Technical Data

ELR Earth Leakage Relay		
Settings	Sensitivity adjustment	30mA, 50mA, 75mA,100mA, 125mA, 150mA,200mA, 250mA, 300mA,500mA, 750mA,1A, 1.25A, 1.5A,2A, 2.5A, 3A,5A, 7.5A, 10A,12.5A, 15A, 20A,25A, 30A
	Accuracy	+0%~-15%
	Time delay setting	Instantaneous, 50ms, 100ms, 150ms, 250ms, 350ms, 500ms, 1s, 3s
	Accuracy	± 5%
Auxiliary supply	Supply voltage	110V AC±10% or 240V
		90-120VAC
	Frequency	50 Hz or 60 Hz
	VA rating	Less than 3 VA
Indicators	Auxiliary supply	Green LED
	Time delay	Red LED
	Trip	Red LED
	Leakage current*	5 red LED for leakage levels
Inputs	Remote test/ reset inputs	N.O. dry contact*
	Sensor	CT
Outputs	Contacts (Trip / 50% pre-fault*)	
	Contact arrangement	Change over
	Contact rating	6A,250V AC (cos ϕ=1)
	Contact material	Silver alloy
	Operating time	15 ms max.
	Expected electrical life	100,000 operations at rated current
	Expected mechanical life	5×106 operations
NPN-type transistor***	C pole output current	50mA
	DC power output voltage	12V
	DC power output current	50mA
Mechanical	Mounting method	Panel mounted, DIN rail mounted, Screws mounted
	Weight	0.3kg

Typical Application Diagram

ELR1

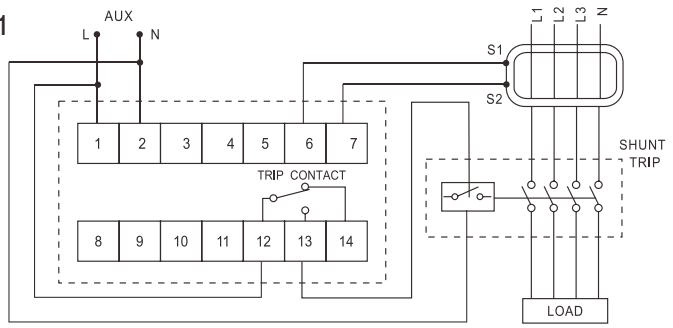

ELR1E

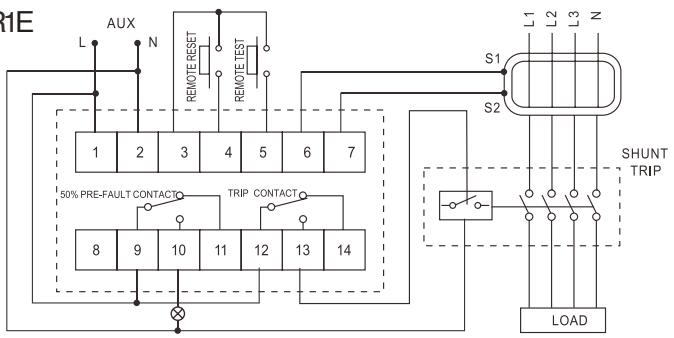

ELR1Z

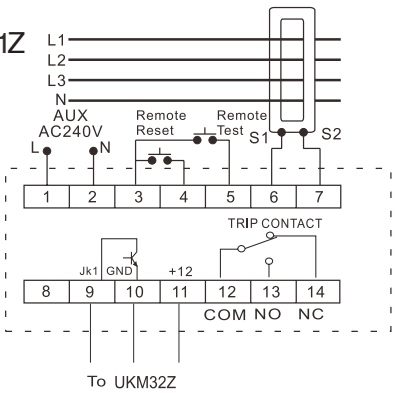

Case Dimensions

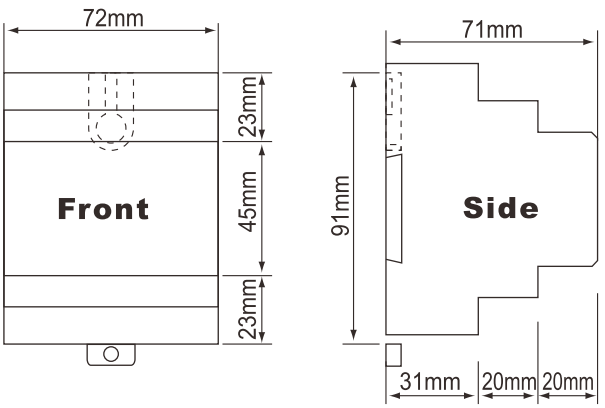



General

The DKTR1 Series Thermal Relays (DKTR1-25, DKTR1-36, DKTR1-93, DKTR1-150, DKTR1-200, DKTR1-630) are suitable for use in circuits with rated voltages up to 660 V
and rated currents up to 93 A, at AC 50/60 Hz, providing reliable overcurrent protection for AC motors.
These relays feature a differential mechanism and temperature compensation, ensuring stable performance under varying operating conditions. The DKTR1 relays can also be directly
mounted onto CJX2 series AC contactors, allowing convenient assembly and enhanced motor protection.
The product conforms to IEC60947-4-1 standard.

Motion Characteristic:Three-phase Balance Motion Time

No	Timesof the setting current(A)	Motion time			Start condition	Ambient temperature
1	1.05	＞2h			Cold state	20±5°C
2	1.2	＜2h			Heat state(Following the No.1 test)	
3	1.5	＜4min				
4	7.2	≤10A	2s＜Tp≤10s	≤63A	Cold state	
		＞10A	4s＜Tp≤10s	＞63A		

Phase-losing Motion Characteristic

No	Timesof the setting current(A)		Motion time	Start condition	Ambient temperature
	Any two phases	Another phase			
1	1.0	0.9	＞2A	Cold state	20±5°C
2	1.15	0	＜2A	Heat state(Following the No.1 test)	

DKTR1 Series Thermal Relay

Type	Setting range(A)
DKTR1- 25	0.1~0.16
	0.16~0.25
	0.25~0.4
	0.4~0.63
	0.63~1
	1~1.6
	1.6~2.5
	2.5~4
	4~6
	5.5~8
	7~10
	9~13
	12~18
	17~25
DKTR1-36	23~32
	30~40
DKTR1-93	17~25
	23~32
	30~40
	37~50
	48~65
	55~70
	63~80
	80~93
DKTR1-150	80~104
	95~120
	110~140
	90~150
DKTR1-200	30~50
	48~80
	60~100
	90~150
DKTR1-630	132~220
	200~330
	300~500
	380~630

Outline and Mounting Dimension

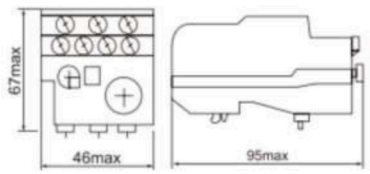

DKTR1-25

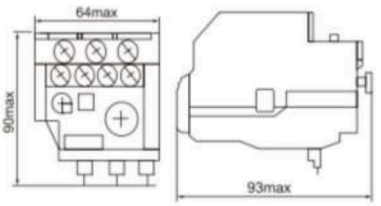

DKTR1-36

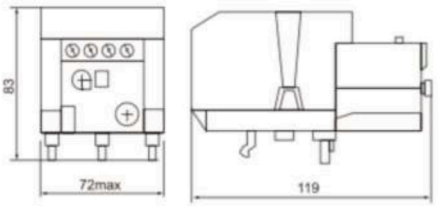

DKTR1-93

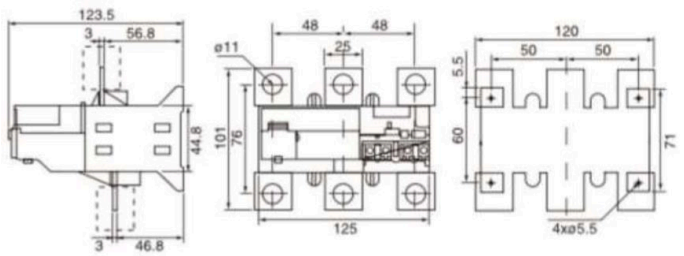

DKTR1-200

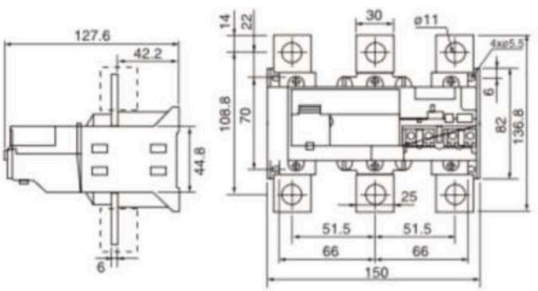

DKTR1-630

Accessories

Pic			
Description	DKTR1-25 mounting base	DKTR1-36 mounting base	DKTR1-93 mounting base
Application	Assembled with DKTR1-25 to form a complete set	Assembled with DKTR1-36 to form a complete set	Assembled with DKTR1-93 to form a complete set

I Automatic transfer switch



General

The DATS Automatic Transfer Switch (ATS) is a PC-class infrequent change-over switch with a two-station design (commonly used for main power supply A and backup power supply B). It is suitable for AC systems with AC 50–60 Hz and rated currents from 6 A to 63 A. The main function of the ATS is to ensure continuous operation. When the main power supply (A) fails, the ATS automatically switches to the backup power supply (B) within 50 milliseconds, effectively preventing power outages and ensuring reliable system operation.

Working Conditions

- Operating environment temperature: -5 °C to +40 °C. The 24-hour average temperature must not exceed +35 °C.
- Storage environment temperature: -25 °C to +55 °C (can reach up to +70 °C in a short period, within 24 hours).
- Altitude: Installation site must be below 2000 m.
- Relative humidity: Must not exceed 50% when ambient temperature is +40 °C. Higher relative humidity is possible at lower temperatures (e.g., at +20 °C, monthly average maximum relative humidity may reach 90%). Appropriate measures must be taken to prevent condensation caused by temperature changes.
- Pollution level: Class3 (conductive pollution, or dry non-conductive pollution becoming conductive due to condensation).
- Installation method: The ATS can be mounted vertically or horizontally inside a cabinet. For special installation requirements, please contact us.
- Protection grade: Ip30.
- Overvoltage category: Main circuit -Category III; Control and auxiliary circuits -Category II.

Main technical parameters

Case grade	63
Rated operating current Ie(A)	6A/10A/16A/20A/25A/32A/40A/50A/63A
Rated insulation voltage UI	690V
Rated impulse withstand voltage Uimp	8kV
Rated working voltage Ue	AC220V/AC110V
Rated frequency	50/60Hz
Class	PC class: can be switched on and loaded without generating short-circuit current
Pole number	2P 4P
Rated short-circuit current Iq	50kA
Short circuit protection device (fuse)	RT16-00-63A
Rated impulse withstand voltage	8kV
Control circuit	Rated control voltage Us: AC220V, 50Hz Normal working conditions: 85%Us-110%Us
Auxiliary circuit	AC220V/110V 50Hz Ie=5A
Contactor change-over time	<50ms
Operation change-over time	<50ms
Return change-over time	<50ms
Power off time	<50ms
Change-over operation time	<50ms
Mechanical life	>26000 times
Electrical life	>1500 times
Usage category	AC-31B

Automatic transfer switch

Working conditions

- The temperature range of the operating environment is -5°C~+40°C, an d the average temperature within 24 hours shall be lower than +35°C , and the temperature range of the storage environmentis -25°C~+55°C, which can be reached+70°C in a short time (within 24 hours).
- The altitude of the installation site should be lower than 2000m.
- The relative temperature at the installation site shall not exceed 50% when the ambient air temperature is +40°C, Higher relative humidity is possible at lower temperatures. For example: when the average minimum temperature of the wettest month is +20°C, the monthly average maximun relative humidity of that month can reach 90%Appropriate measures should be taken to prevent condensation due to temperature changes.
- Pollution level 3 (conductive pollution, or dry non-conductive pollution becomes conductive due to condensation)ATS can be installed vertically or horizontally in the cabinet, if there are special installation requirements, contact US.
- The protection grade of ATS case is Ip30
- Over voltage category
  Main circuit category III; control auxiliary circuit category II.

Structure and Wiring instructions

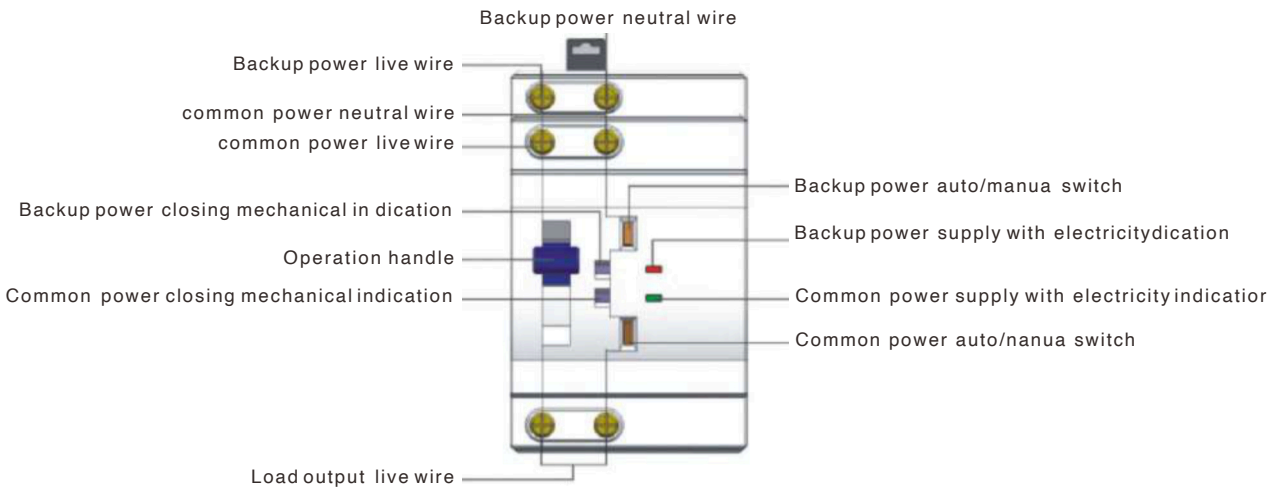

Overall and installation dimension

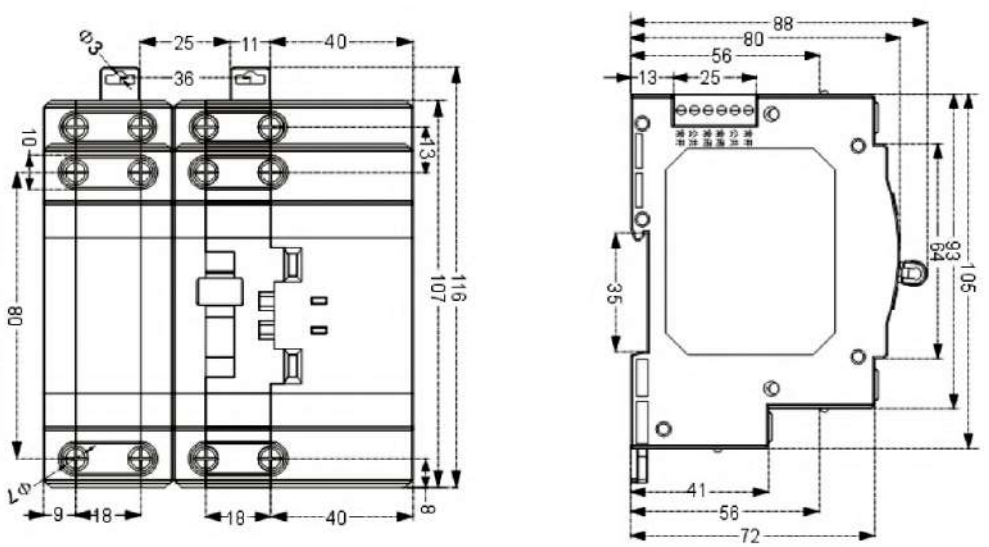

Note:

◇ Terminal wiring area: fit for (1~25)mm²

◇Wre connectionscrewisM5,torque：3.0N.m



Manual Changeover Switch

Product advantage

The Manual Changeover Switch can switch on, carry load, and break the circuit under normal conditions, functioning as a switch disconnector.

Technical Parameters

Product model	MCB-CO	
Technical Data	Rated Voltage	240/415V~
	Rated Current	16, 25, 32,40, 63,80,100,125A
	Rated Frequency	50/60Hz
	Number of Poles	1,2,3,4P
	Contact form	1-0-2
Electrical	Electrical Life	1500 Cycles
Features	Mechanical Life	8500 Cycles
	Protection degree	IP20
	Ambient Temperature	-5°C...40°C
Electrical	Terminal/Cable size	50mm^2
Features	Mounting	On DIN rail EN60715(35mm) by means of fast clip device.

I Manual Changeover Switch

Technical Parameters

	MCB-CO
Circuit Diagram	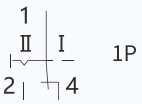 1P
	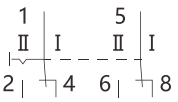 2P
	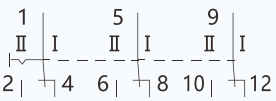 3P
	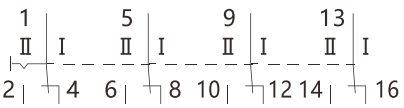 4P

Outline dimension

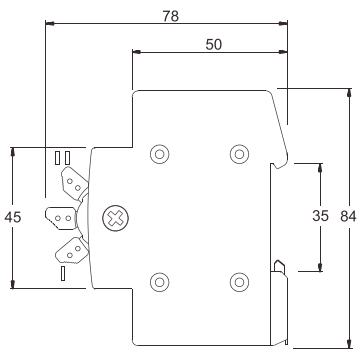

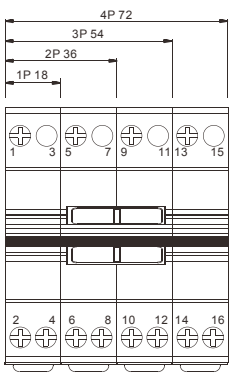

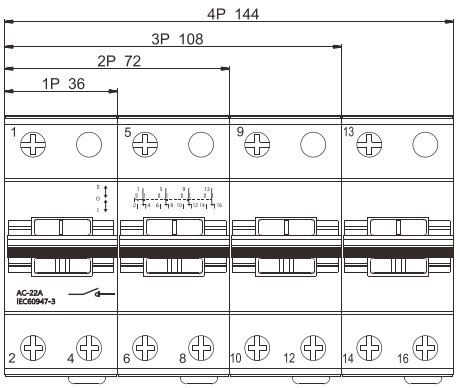



General

The DMK Series Electric Motor Protection Circuit Breakers use a modular design with a compact structure. They feature reliable breaking and protection functions, integrated with a thermal relay. The design ensures strong functionality, high versatility, and convenient operation.

The DMK series conforms to IEC60947-2, IEC60947-4-1, and EN 60947-1 standards. The switch and contact device can be used for direct motor starting.

The UV2/UV3 series outer covering provides a protection rating of up to IP65.

This series includes three product types:

- DMK with button control: Thermo-magnetic motor protection circuit breaker with integrated button operation.
- DMK with change-over switch control (with thermal protection): Thermomagnetic motor protection circuit breaker controlled by a change-over switch.
- DMK with change-over switch control (magnetic only): Magnetic motor protection circuit breaker controlled by a change-over switch (without thermal protection).

DMK Series Motor Protection Switches

Product Photo	Description
	DMK25 0.16A Motor Protection Switch
	DMK25 0.25A Motor Protection Switch
	DMK25 0.4A Motor Protection Switch
	DMK25 0.63A Motor Protection Switch
	DMK25 1A Motor Protection Switch
	DMK25 1.6A Motor Protection Switch
	DMK25 2.5A Motor Protection Switch
	DMK25 4A Motor Protection Switch
	DMK25 6.3A Motor Protection Switch
	DMK25 10A Motor Protection Switch
	DMK25 14A Motor Protection Switch
	DMK25 18A Motor Protection Switch
	DMK25 23A Motor Protection Switch
	DMK25 25A Motor Protection Switch
	DMK32 32A Motor Protection Switch
	DMK80 40A Motor Protection Switch
	DMK80 50A Motor Protection Switch
	DMK80 63A Motor Protection Switch
	DMK80 80A Motor Protection Switch

LASK
Ihr Elektro & Baupartner

I Analog Timer



Product advantage

Some electrical appliances used in homes and workplaces need to operate periodically at certain times during the day (for example, floor heaters, electric water heaters and storage water heaters, lighting fixtures, or other similar devices). To meet such needs, programmable time switches using electro-mechanical technology have been designed and manufactured.
Our Deko brand time switches have the following features:

Main Features

- Equipped with a servomotor, offering precise timing capability.
- Reserve function allows programs to continue for up to 100 hours during power cuts.
- Operates with 220 V / 50 Hz supply voltage.
- Independent auxiliary contact, usable in both AC and DC circuits up to 400 V.
- 96 notches on the programming disc, each corresponding to 15 minutes.
- 24 hours of the day are displayed on the same disc.
- Can operate in two modes: manual and automatic.
- Mounted on a standard 36 mm rail (per En50022).
- Due to the small and sensitive servomotor, it should not be installed next to contactors or similar devices.
- Must be protected by an independent thermal-magnetic circuit breaker (automatic fuse).

Analog Timer Relay

Analog timer relays have a wide range of applications. They are used in all systems that require operation at specific times and deactivation after a defined period. Typical applications include:

- Park irrigation systems
- Road lighting systems
- Agricultural irrigation systems
- School bells
- Heating and cooling systems

This ensures that these systems operate automatically and only for the desired period of time, without requiring user intervention.



LASK International AG, Blegistrasse 13,6340 Baar ZG,Schweiz

contact@lask-international.com